VHD Amplifiers

User Guide

· VHD2000 · VHD3200



Important Safety Instructions

Before using your VHD Amplifiers, be sure to carefully read the applicable items of these operating instructions and the safety suggestions.

1. **Read all product instructions.**
2. **Keep printed instructions, do not throw away.**
3. **Respect and rewiew all warnings.**
4. **Follow all instructions.**
5. **Do not use this unit near water, in unprotected out door areas or in rain or wet conditions.**
6. **Clean only with dry cloth.**
7. **Do not block any ventilation openings.**
8. **Install in accordance with KV2 Audio's recommended installation instructions.**
9. **Do not install near any heat sources such as heat radiators, heat registers, stoves or other apparatus that produce heat.**
10. **Do not defeat the safety purpose of the grounding type plug. A grounding type plug has two blades and a third grounding connector. The third connector is provided for your safety. If the provided plug does not fit into your outlet, consult an electrician for replacement of the obsolete outlet.**
11. **Protect the power cord from being walked on or pinched, particularly at plugs, convenience receptacles. The AC mains plug or appliance coupler shall remain readily accessible for operation.**
12. **Only use accessories specified by KV2 Audio.**
13. **Install the product only with rigging specified by KV2 Audio, or sold with the loudspeaker.**
14. **Unplug this loudspeaker during lightning storms or when unused for long periods of time.**
15. **Refer all servicing to qualified service personnel. Servicing is required when the loudspeaker has been damaged in any way, such as when the power-supply cord or plug has been damaged; liquid has been spilled or objects have fallen into the loudspeaker; rain or moisture has entered the loudspeaker; the loudspeaker has been dropped; or when for undetermined reasons the loudspeaker does not operate normally.**
16. **Do not remove front or back panels. Removal of the panel will expose hazardous voltages. There are no user serviceable parts inside and removable may void the warranty.**
17. **An experienced user shall always supervise this professional audio equipment.**

CAUTION: TO REDUCE THE RISK OF ELECTRIC SHOCK, DO NOT REMOVE THE PANELS.
NO USER-SERVICEABLE PARTS INSIDE. REFER SERVICING TO QUALIFIED PERSONNEL.

WARNING: To prevent fire or electric shock, do not expose this equipment to rain or moisture.

SAFETY SUMMARY

To reduce the risk of electric shock, disconnect the loudspeaker from the AC mains before installing audio cable. Reconnect the power cord only after making all signal connections. Connect the loudspeaker to a twopole, three- wire grounding mains receptacle. The receptacle must be connected to a fuse or circuit breaker. Connection to any other type of receptacle poses a shock hazard and may violate local electrical codes. Do not allow water or any foreign object to get inside the loudspeaker. Do not put objects containing liquid on or near the unit. To reduce the risk of overheating the loudspeaker, avoid exposing it to direct sunlight. Do not install the unit near heat-emitting appliances, such as a room heater or stove. This loudspeaker contains potentially hazardous voltages. Do not attempt to disassemble the unit. The unit contains no user serviceable parts, repairs should be performed only by factory trained service personnel.

Contents

VHD2000 **3**

Introduction 3

Getting started 4

Features - Front panel 5 - 6

Features - Rear panel 7

Using the system 8 - 10

Specifications 11

Block Diagram 12

Recommended Enclosure Combinations 13 - 19

VHD3200 **20**

Introduction 20

Getting started 21

Features - Front panel 22

Features - Rear panel 23

Operation 24

Specifications 25

Warranty · Service **26**

Notes **27 - 28**

VHD2000 VERY HIGH DEFINITION AMPLIFIER

VHD2000 - part number KVV 987 177 (250 V)
KVV 987 081 (230 V)
KVV 987 082 (115 V)



Application

Specifically designed as the amplification and control elements for the VHD loudspeaker systems in a full rack mount module

- Portable PA
- Fixed installations

Introduction

The VHD2000 is the amplifier control unit for processing and powering one VHD2.0 mid-high enclosure. It also houses all processing and control electronics for the associated VHD subwoofer systems.

The VHD2000 is a three-way, rack-mounted unit containing high frequency, mid frequency and mid-bass amplifiers. The unit features Class AB mosfet amplifiers for the high frequencies, with transformer-balanced outputs, and Class H mosfet amplifiers for the mid frequencies. The midbass amplifier is a new version of KV2 Audio's high efficiency, analogue switch-mode amplifier delivering 1600 Watts.

The VHD2000 is the world's first loudspeaker control system with proprietary digital signal delay technology using Super Digital pulse density modulation components providing a 20 MHz sampling rate. The unit provides complete audio system control including equalisation, overdrive protection, thermal protection and user adjustable set up parameters. Once the set-up process is completed, the VHD2000 manages all system functions and assures optimal performance.

The VHD2000 is "Line Driver Ready" and has its own input impedance selector on the front panel to accurately match up the input impedance to the output of any mixer used. In most cases it would be advisable to use a VHD LD4 line driver in addition at the mixer end to ensure that the line to the amplifier is driven correctly and the signal integrity maintained.

Front Panel:

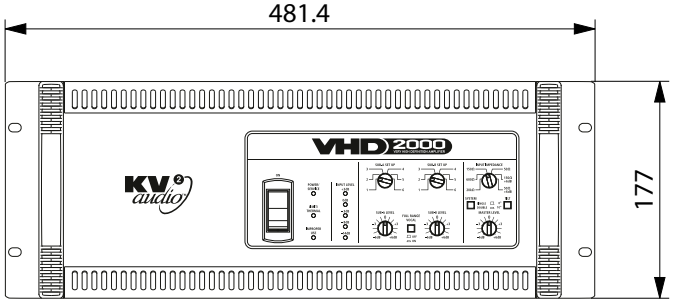

FOR YOUR SAFETY, READ THE IMPORTANT PRECAUTIONS SECTION AS WELL AS THE INPUT, OUTPUT AND POWER CONNECTION SECTIONS OF THIS MANUAL.

Rear Panel:

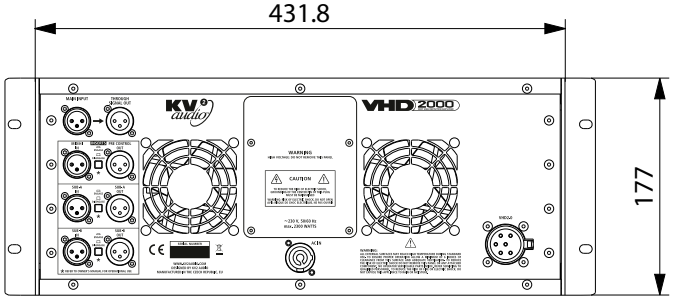

Side Panel:

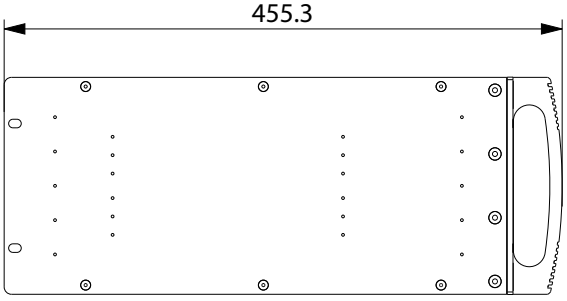

Unpacking

Unpack the VHD2000 and check to see if there is any damage to it. If you find any damage notify your supplier immediately. Only the consignee may institute a claim with the carrier for damage incurred during shipping. Be sure to save the carton and all packing materials for the carrier's inspection.

Should you ever need to ship the unit, only use the original factory packaging. If the shipping carton is unavailable, contact your supplier to obtain a replacement.

The VHD2000 carton should contain:

- VHD2000 amplifier control unit
- User Guide
- PowerCon detachable power cable

Rack Mounting

VHD2000's will mount in standard 19" rack systems. Integral rear mounting rack ears are also provided for additional support, do not rely on fixing and mounting the VHD2000 using just the front panel as support. Use eight screws and washers to mount the amplifier to the equipment rack rails (four for the front and four for the rear). We recommend using a shock mounted rack for touring use to prolong the life of your VHD2000.

Cooling

The VHD2000 has a comprehensive cooling system featuring chassis-sealed PCB board mounting and shock mounted, speed controlled fans. This means that the cooling system never drives air across PCB boards, connectors or components ensuring prolonged electronic component lifespan and minimizing maintenance cycles.

Air is drawn into the front of the amplifier by the two fans on the rear panel, this passes over the cooling fins of the heat sinks and exhausts through the rear. If the heat sink gets too hot, its sensing circuit will open the output relay, disconnecting the load.

It is important to have an adequate air supply at the front of the amplifier, and enough space around the rear of the amplifier to allow the cooling air to escape. If the unit is rack mounted, do not use doors or covers on the rear of the rack; the exhaust air must flow without restriction. If you are using racks with closed backs, use fans on the rear rack panel to ensure an ample air supply.

IMPORTANT! Please note that for correct full performance of the unit AND ANY WARRANTY COVER, it is important that regular maintenance of the front vents and filters as well as the rear panel fans be inspected and cleaned by removing any dust and debris build-up. Any product failure due to lack of attention in this matter will immediately void any current warranty. (Please refer to notes re ventilation procedures).

AC Requirements

A PowerCon cable is provided to connect the VHD2000 to a suitable AC power supply.

The PowerCon is a connector without breaking capacity, i.e. the PowerCon should not be connected or disconnected under load or while it is live. Always isolate your AC supply before disconnecting the PowerCon connector.

Your VHD2000 will be supplied pre set to the voltage used in your area. The table below provides typical current draw figures for the VHD2000.

AC Input	Current draw with amplifier running at Average Power	Current draw with amplifier running at Peak Power
250 V	7.5 A	11 A
230 V	8 A	12 A
115 V	16 A	24 A

Front Panel

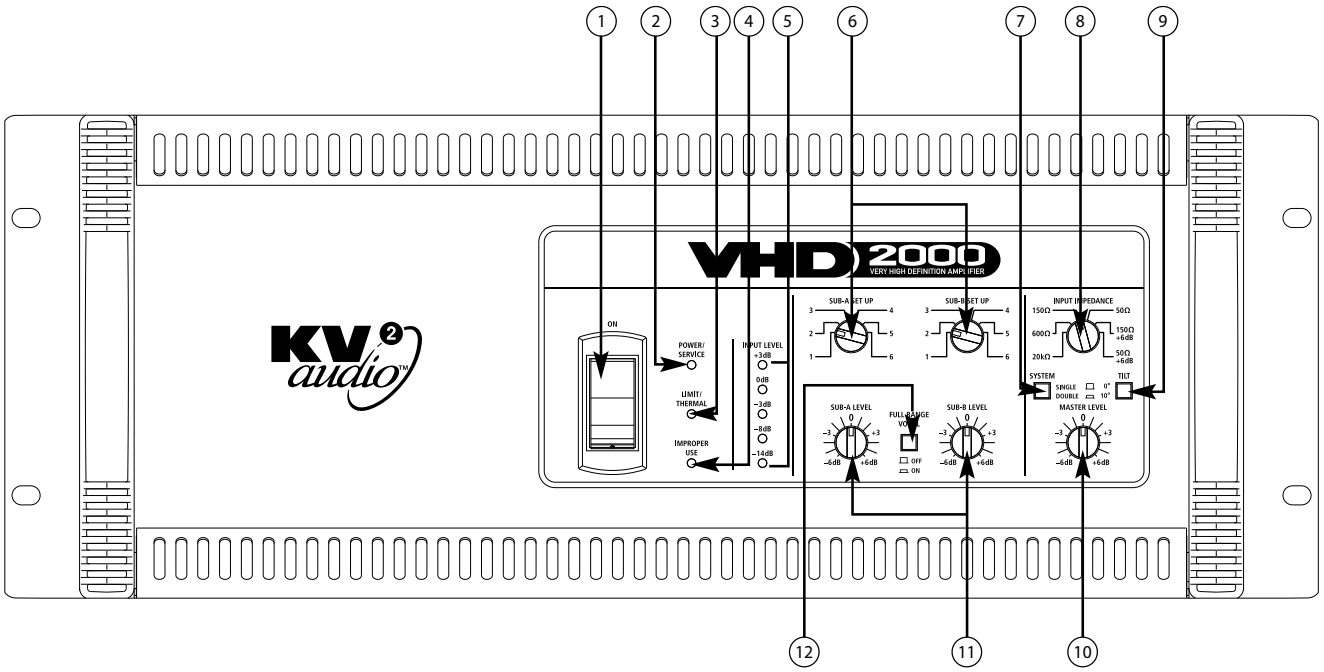

1) AC Mains Switch

The VHD2000 has a combination AC Mains switch/circuit breaker on the front panel. If the switch shuts off during normal use, push it back to the ON position once. If it will not stay on you should take the unit to qualified service personnel to have it serviced.

2) Power / Service LED

This is a dual colour LED, when green it indicates that the AC power is on. When red it indicates that there is a fault condition sensed within the VHD2000 and that the unit needs servicing.

3) Limit / Thermal LED

This is a dual colour LED, when green it indicates that the audio limiter has been activated. When red it indicates that the thermal limit of the VHD2000 has been exceeded and the unit has shut down because of this.

4) Improper Use LED

If the VHD2000 is connected improperly then this LED will light and the unit will shut down. An example of this is if a full range signal is applied to the 'Mid/Hi In' rather than the 'Main Input', the VHD2000 will sense this and shut down to further protect any damage occurring to loudspeakers that are connected to it.

5) Signal LED's

These LED's give visual indication of the level of the input signal applied to the 'Main Input'.

6) Sub A & B Set Up

These switches are set according to which combination of subwoofers is being used with the system - see Operation Modes.

7) System Single / Double

This switch sets the controller for use when either a single VHD2.0 is being used or a double system using 2 VHD2.0's are being used. In this mode another VHD2000 would be required to power the second VHD2.0 and both switches should be set to 'Double'..

8) Input Impedance

This rotary switch sets the Input Impedance of the VHD2000 to match that of the mixer or other device supplying the audio signal to the VHD2000's input. This is especially important when driving longer cable runs and it enables the line to be driven correctly without any losses or other interference. Ideally an LD4 line driver should be used. See Using the System.

9) Tilt

This switch when depressed electronically 'tilts' the dispersion of the VHD2.0 down vertically by 10°. The Tilt switch should only be used when a single VHD2.0 system is being used..

10) Master Level

This is the master level control for the system and will affect both the VHD2.0 and the subwoofer outputs.

11) Sub A / B Level

These are the level controls for the Sub A and B outputs; they are 'post' the Master Level control.

12) Full Range Vocal

When this switch is activated it enables the VHD2.0 to be used as a full range system without the need for subwoofers, ideally suited to vocal reproduction and light music applications. The VHD2.0 will run full range with a 60 Hz roll-off added to the system for protection. Note in this mode the subwoofer outputs will be muted to prevent incorrect use of the system.

Front Panel

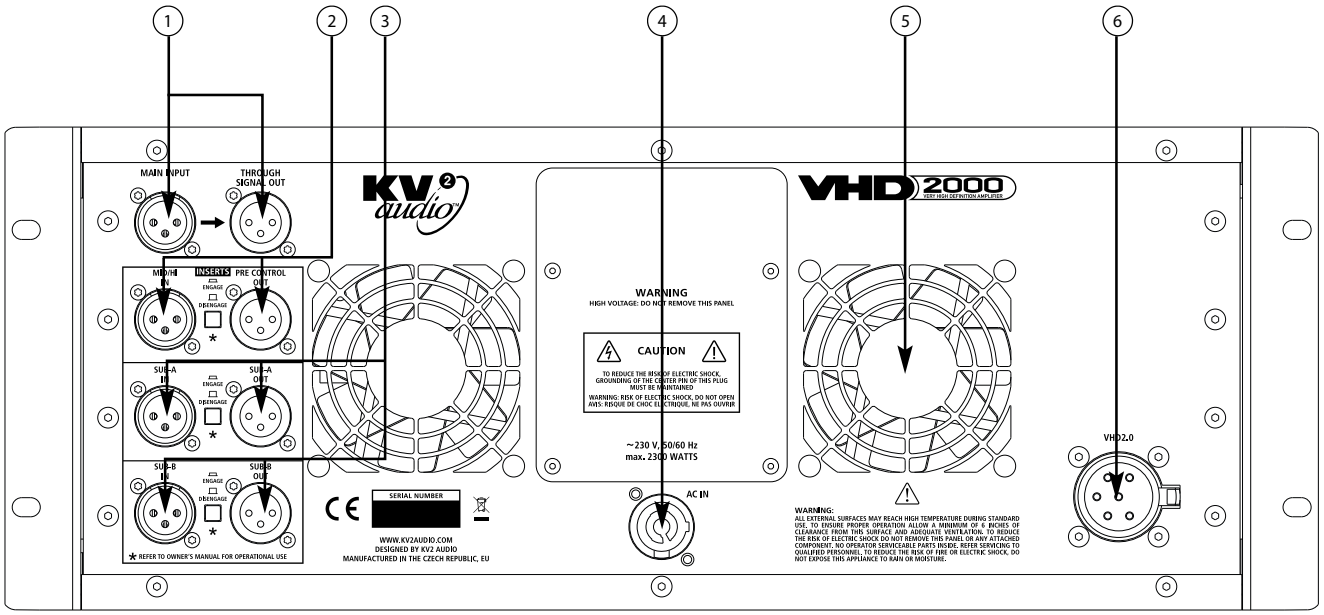

1) Main Input / Through Signal Out

This is the main system input connector with associated 'Through Signal Output' connector for sending unprocessed signal to other devices, such as more VHD2000's to power more VHD2.0's in a system.

2) Mid/High In / Pre Control Out

This is an insert point for the Mid/High section of the VHD2000, the signal sent to the VHD2.0 cabinet. It enables you to 'insert' an external device (a delay line for example) into the signal that is being sent to the VHD2.0. With the associated switch in the 'Engage' setting the Pre Control Out connector would send the signal to the external device, and its output would be returned into the Mid/High In connector.

3) Sub-A In / Sub-A Out, Sub-B In / Sub-B Out

Apart from providing signal processing and power amplification for driving the VHD2.0 enclosure the VHD2000 also provides processed outputs for feeding VHD3200 subwoofer amplifiers to drive various combinations of subwoofers. The signal for this is usually derived from the Main Input on the VHD2000 but with these Sub In and Sub Out connectors and associated switches the option is available to derive the signal input for the subwoofer section from a different source. For further information see Using the System.

4) PowerCon Power Connector

Accepts a standard PowerCon terminated AC cable.

5) Fans

The cooling fans operate continuously while the VHD2000 is on. An internal temperature sensor increases the speed of the fans during high temperature conditions. Air enters through the front grille and exits through the rear. Be sure to allow adequate air flow to the front of the rack in which the VHD2000 is mounted.

6) AP6 Connector

Accepts a standard AP6 terminated loudspeaker cable. We recommend using 2.5 mm/core cables, six core for the VHD2.0 enclosure and four core for the VHD subwoofers AP4 connectors as all four connectors are used, when using a VHD3200 subwoofer amplifier.

Normal Set up

The VHD2000 is designed to actively power one VHD2.0 cabinet and to provide signal processing for associated subwoofer systems when used. For Normal Mode operation signal is applied to the 'Main Input' connector and all the 'Insert' switches would be in the 'Disengage' position.

The Input Impedance control should be set to match the output impedance of the device feeding the VHD2000. If you are using a KV2 Audio LD4 Line Driver, or device with Line Drivers built in, then the Input Impedance control on the VHD2000 should be set to 50 Ω. If when using the LD4 you are feeding more than one VHD2000 then they should all be set to 20 kΩ with the last one in the signal chain set to 50 Ω. Should you find that once the Input Impedance control has been set there is not enough input signal going into the VHD2000 (by looking at the Input metering) then there are two settings that give you +6 dB extra gain on the input.

Six different combinations of sub woofers are accommodated for when using the VHD2000. The associated 'Sub-A Set Up' and 'Sub-B Set Up' switches are set according to which combination is being utilised on the Sub-A and Sub-B outputs. Both switches must be set to the same setting. These outputs are then fed from the 'Sub-A Out' and 'Sub-B Out' connectors into VHD3200 amplifiers that power the subwoofers themselves. The six different combinations are as follows:

Amplifier / Controller Setting	Sub-A Out	Sub-B Out
Setting 1	2× VHD2.16 (1× 2.15)	2× VHD2.16 (1× 2.15)
Setting 1B	2× VHD2.16 (1× 2.15)	1× VHD2.21
Setting 2	2× VHD4.18	2× VHD4.18
Setting 3	2× VHD2.16 (1× 2.15)	2× VHD1.21
Setting 4	2× VHD2.16 (1× 2.15)	2× VHD4.18
Setting 5 (Double System)	4× VHD2.16 (2× 2.15)	4× VHD4.18
Setting 6 (Double System)	4× VHD2.16 (2× 2.15)	4×VHD1.21

Settings 1B, 5 and 6 require 2× VHD3200 amps

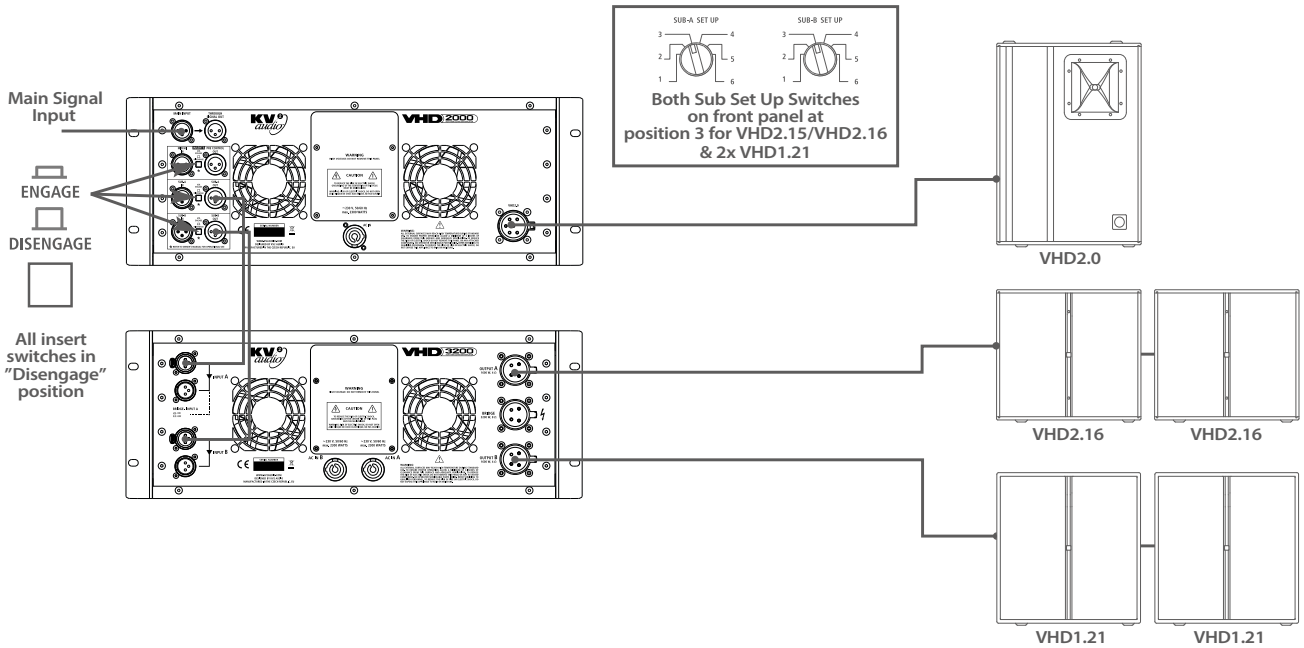

Full Range Vocal Mode

If the VHD2.0 is being used solely for vocal reinforcement & light music playback then the VHD2000 is used with the associated 'Full Range Vocal' switch depressed. A 60 Hz roll-off is added to the system to protect the VHD2.0.

In this mode the subwoofer outputs will be muted to prevent incorrect use of the system.

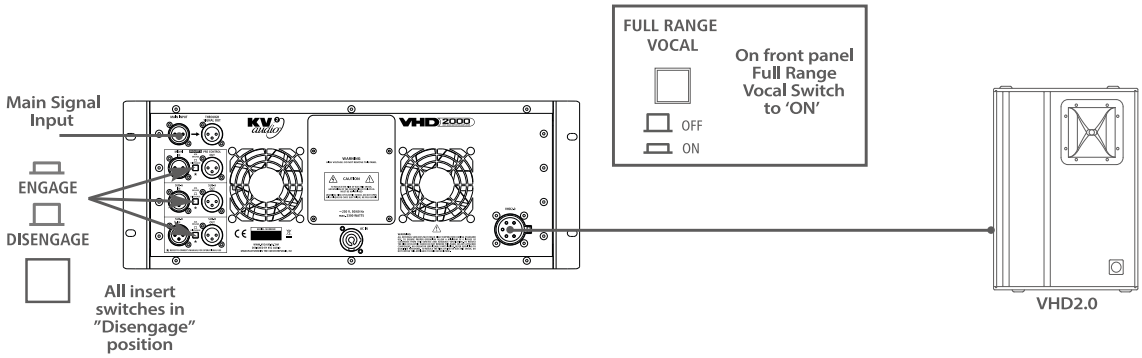

Using the Mid/Hi Insert

The Mid/Hi Insert point gives you the ability to 'insert' a signal processing device into the mid/hi signal chain. For instance in some instances it may be necessary to 'delay' the signal going to the VHD2.0 using a delay line. The Main Input is used as the system input, as per Normal Mode, but the Mid/Hi insert switch is switched to 'Engage'. A feed is taken to the delay line from the 'Pre Control Out' connector and the return from the delay line is connected to the 'Mid/Hi In' connector as per the diagram.

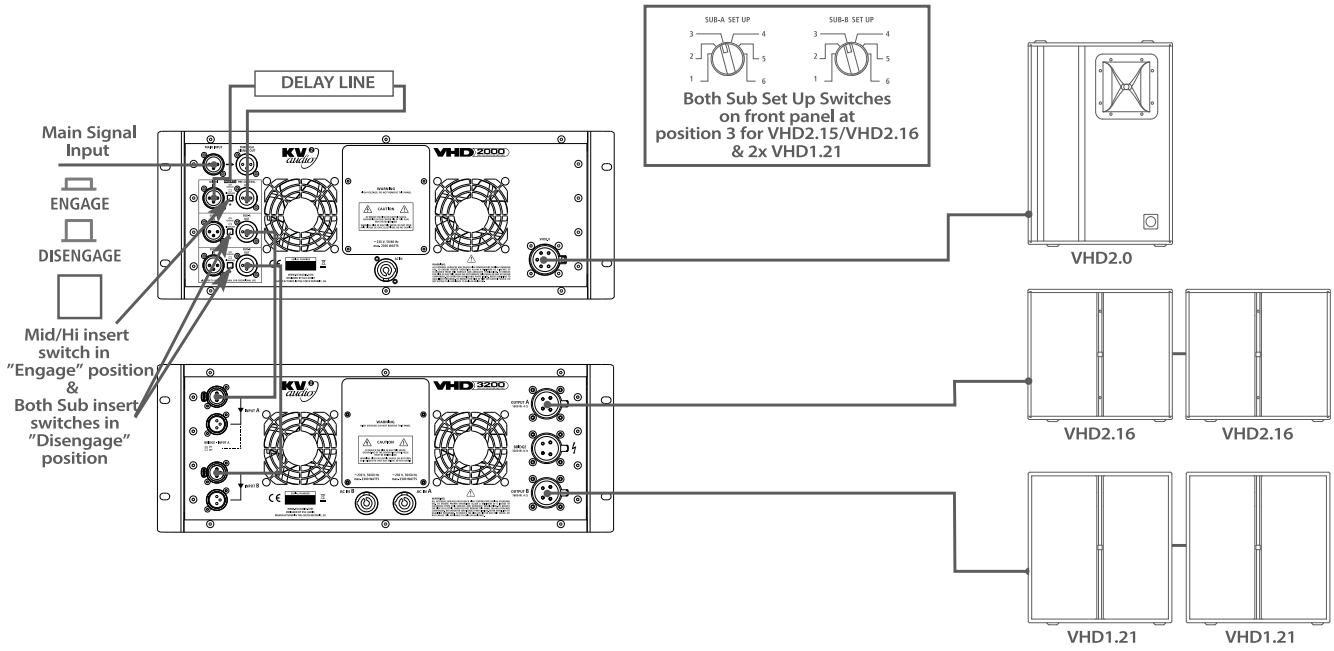

Feeding Subwoofers from another Source

Taking 'Normal Mode' in Section 4.1 as an example, if the VHD2.0 was flying you might want to fly the VHD2.15 above it with the VHD1.21's ground stacked beneath them. In this instance it would be preferable to have both sets of subwoofers fed by separate feeds from the mixing console, to give you independent level control to each of the subwoofer types, and to have the VHD2.0 fed by the main output from the mixing console:

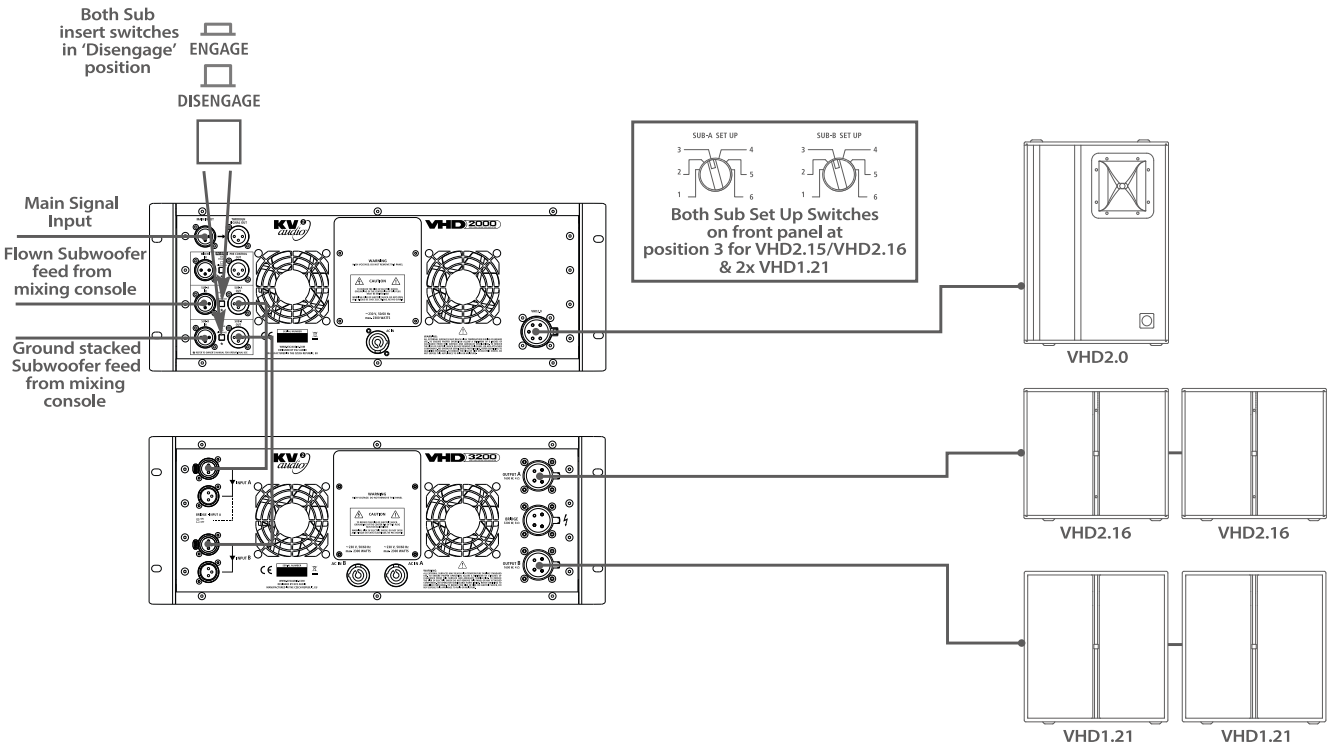

The table below shows the various combinations of the Sub A/B switches and their effect on the signal routing in the VHD2000:

Sub-A Switch Position	Sub-B Switch Position	Sub-A Out Signal derived from	Sub-B Out Signal derived from
Disengage (Out)	Disengage	Main Input	Main Input
Engage (In)	Disengage	Sub-A In	Sub-A In
Engage	Engage	Sub-A In	Sub-B In
Disengage	Engage	Main Input	Sub-B In

Specifications

Output Channels	
Number of Channels	1
High Frequency Amplifier Specification	
Type	Class AB Push-Pull low IM Mosfet design, transformer balanced output
Rated Continuous Power	300 W
Distortion	< 0.05%
Operating Bandwidth	2.2 kHz to 30 kHz
Mid Frequency Amplifier Specification	
Type	High Efficiency, High power bandwidth
Rated Continuous Power	1000 W
Distortion	< 0.05%
Operating Bandwidth	450 Hz to 2.2 kHz
Mid-Bass Frequency Amplifier Specification	
Type	High efficiency, Current-Enhancing, Switched-Rail Amplifier
Rated Continuous Power	1600 W
Distortion	<0.05%
Operating Bandwidth	100 Hz to 450 Hz
Speaker Output	
Speaker Output	AP6
Signal Input	
Input Sensitivity	1.0 V RMS
Input Impedance	20 kΩ (balanced) or 50 Ω "Line Driver ready“ (balanced)
Signal Output	Main Through OUT, Sub A and B OUT
Insert	Mid/High, Sub A, Sub B
Features	
Level Control	+/-6 dB
Subwoofer Level Control	Sub A +/-6 dB, Sub B +/-6 dB
System setup	6×
Full Range Mode	VHD2.0: 60 Hz to 22 kHz, Sub MUTE
Two per Side switch	Double system - EQ
Power	
Power Connector	Neutrik PowerCon®
Operating Voltage	115 V / 230 V / 250 V
Operating Voltage Range	100 to120 V @ 60 Hz | 205 to 240 V @ 50 Hz | 225 to 260 V @ 50 Hz
Recommended Amperage	20 A 115 V | 10 A 230 V | 10 A 250 V
Soft Start	YES
Protection	Thermal breaker
Cooling	2× temperature controlled fans
Physical Dimensions	
Height	177 mm (7.0"), 4RU
Width	481.4 mm (18.9")
Depth	455.3 mm (17.9")
Weight	30 kg (66 lb)

Block Diagram

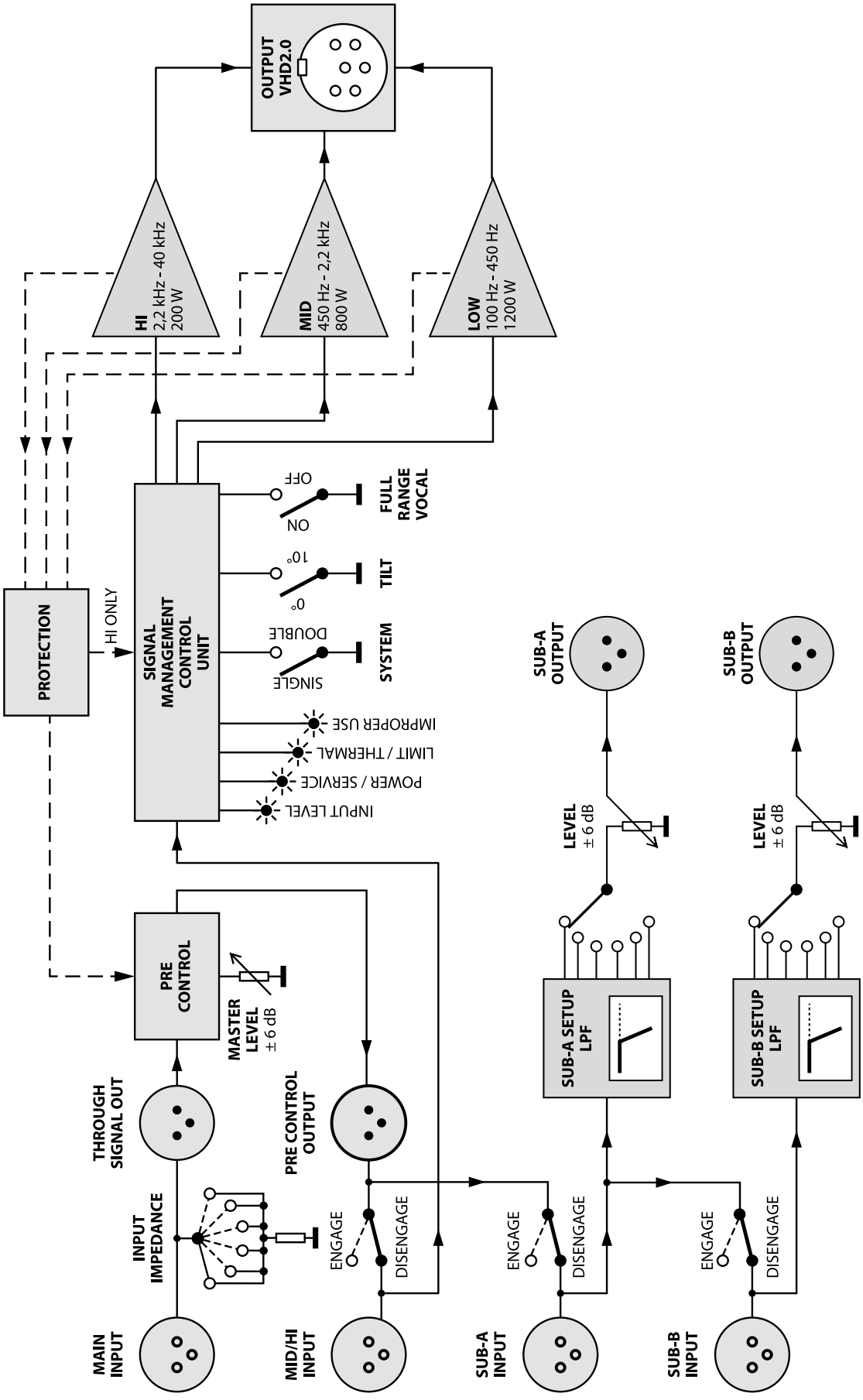

Sub Setting 1

Front panel VHD2000 Setup

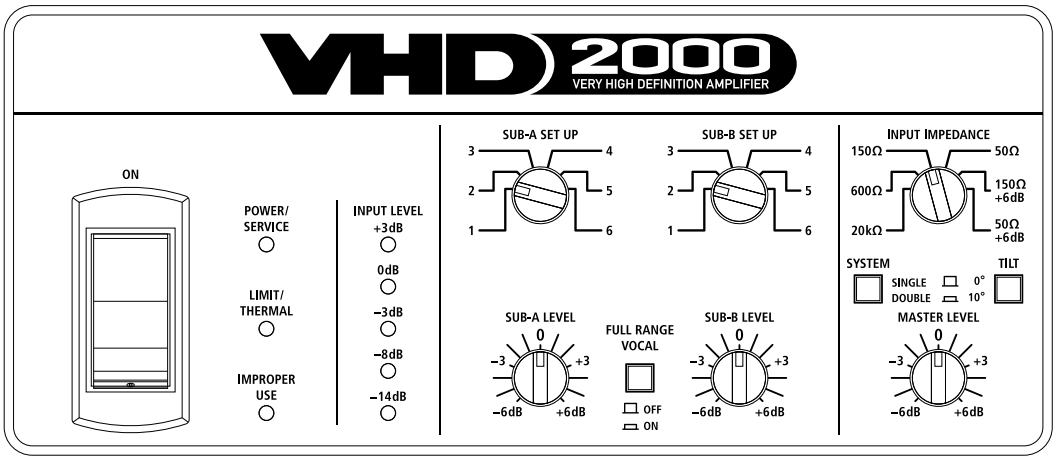

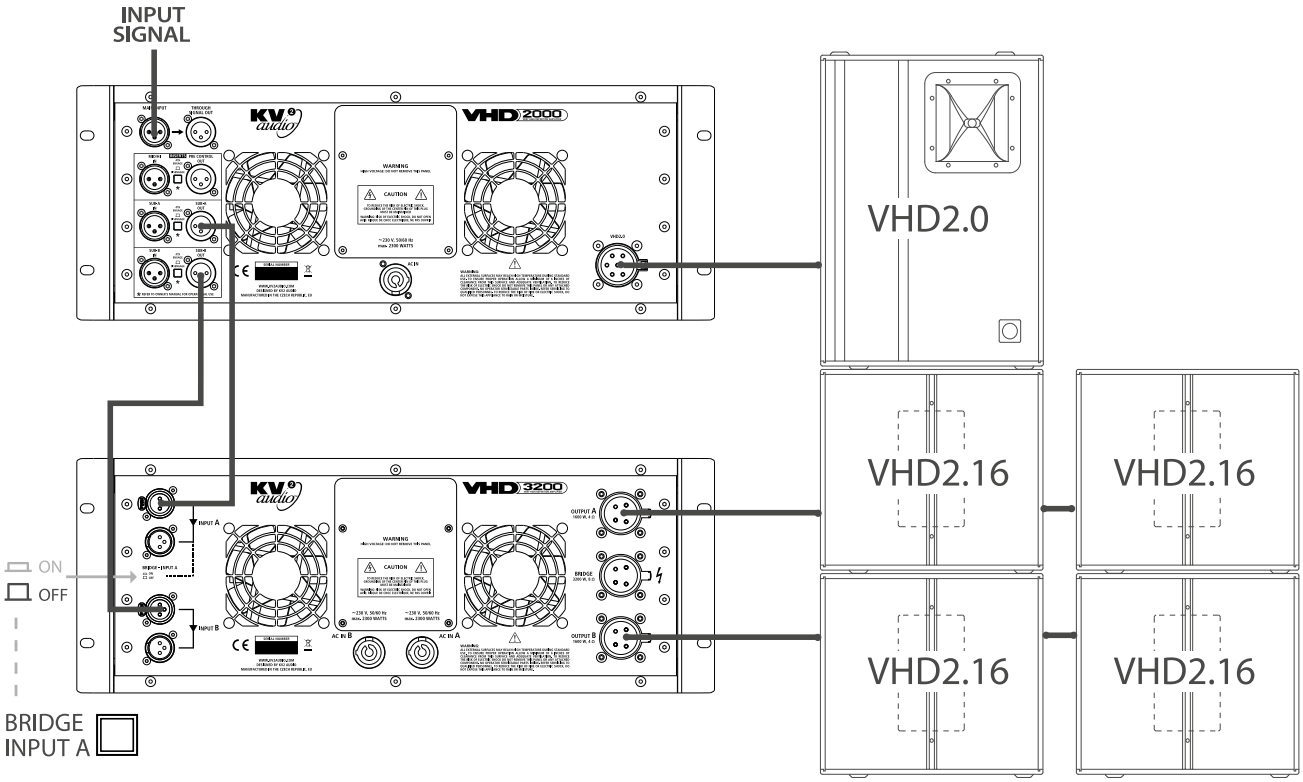

Sub Setting 1B

Front panel VHD2000 Setup

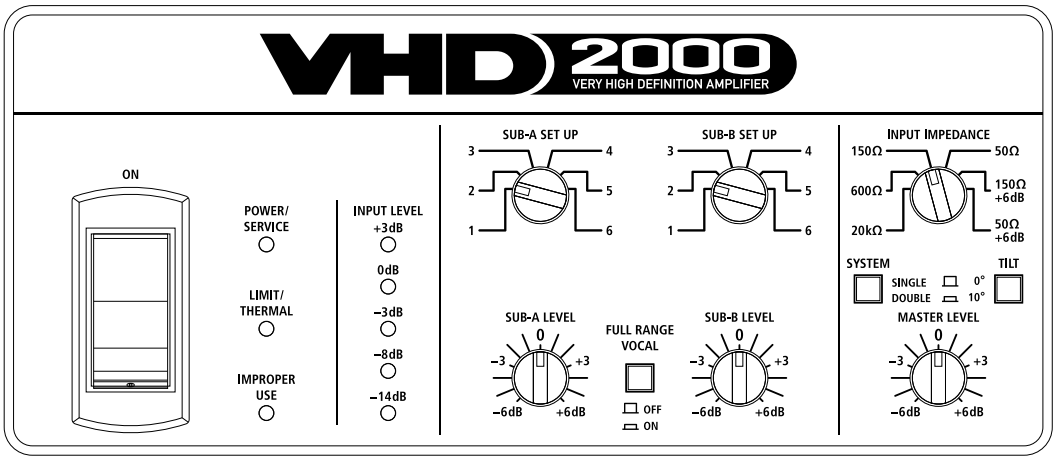

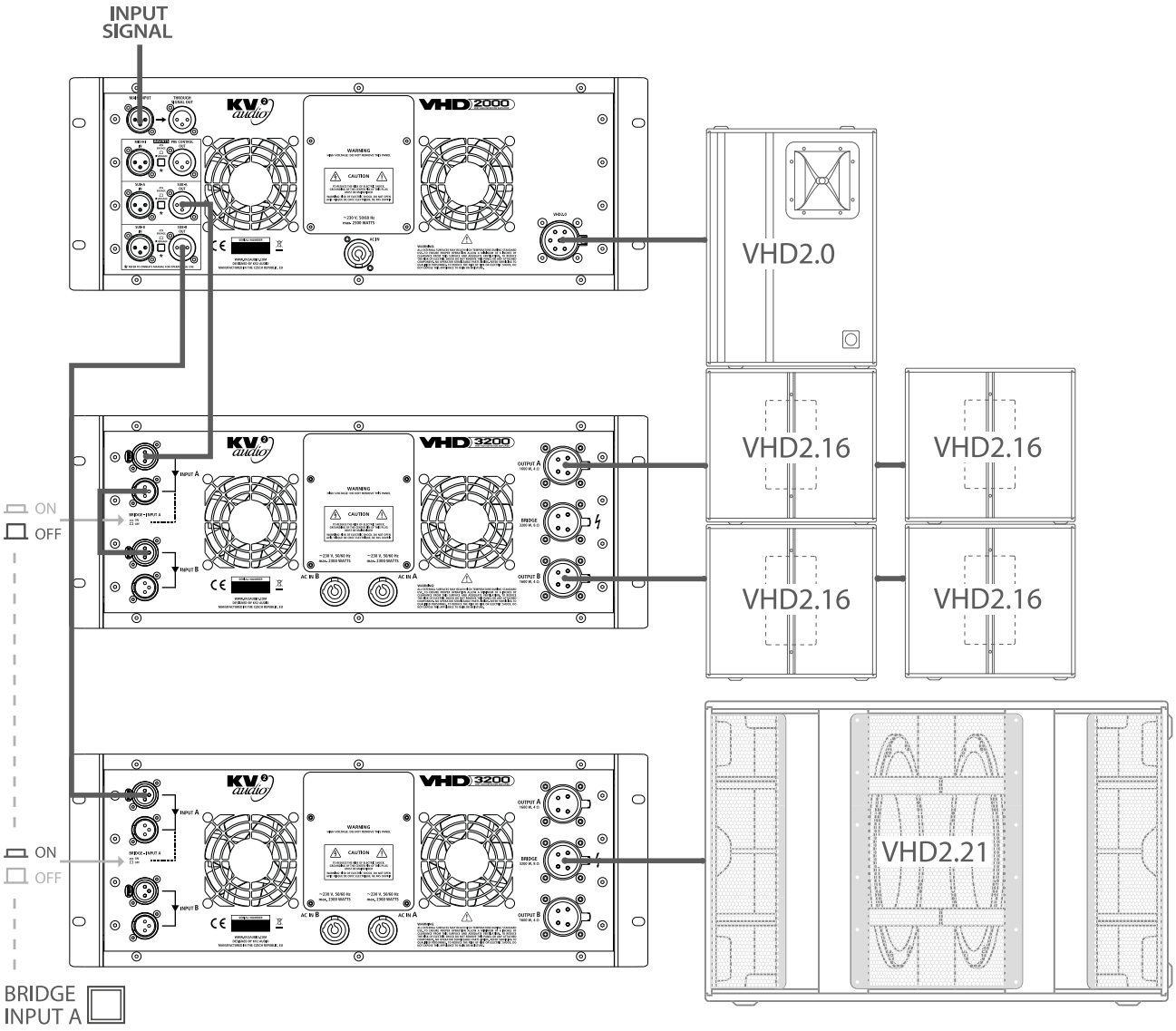

Sub Setting 2

Front panel VHD2000 Setup

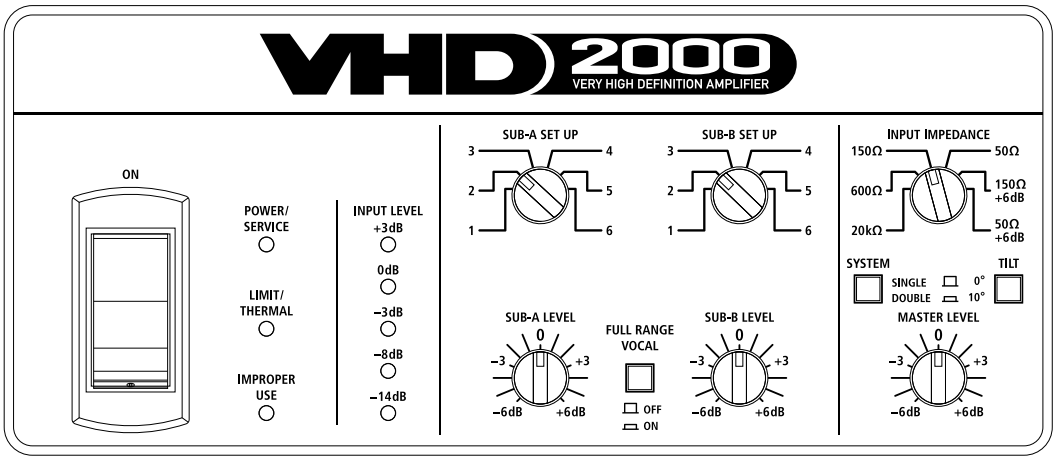

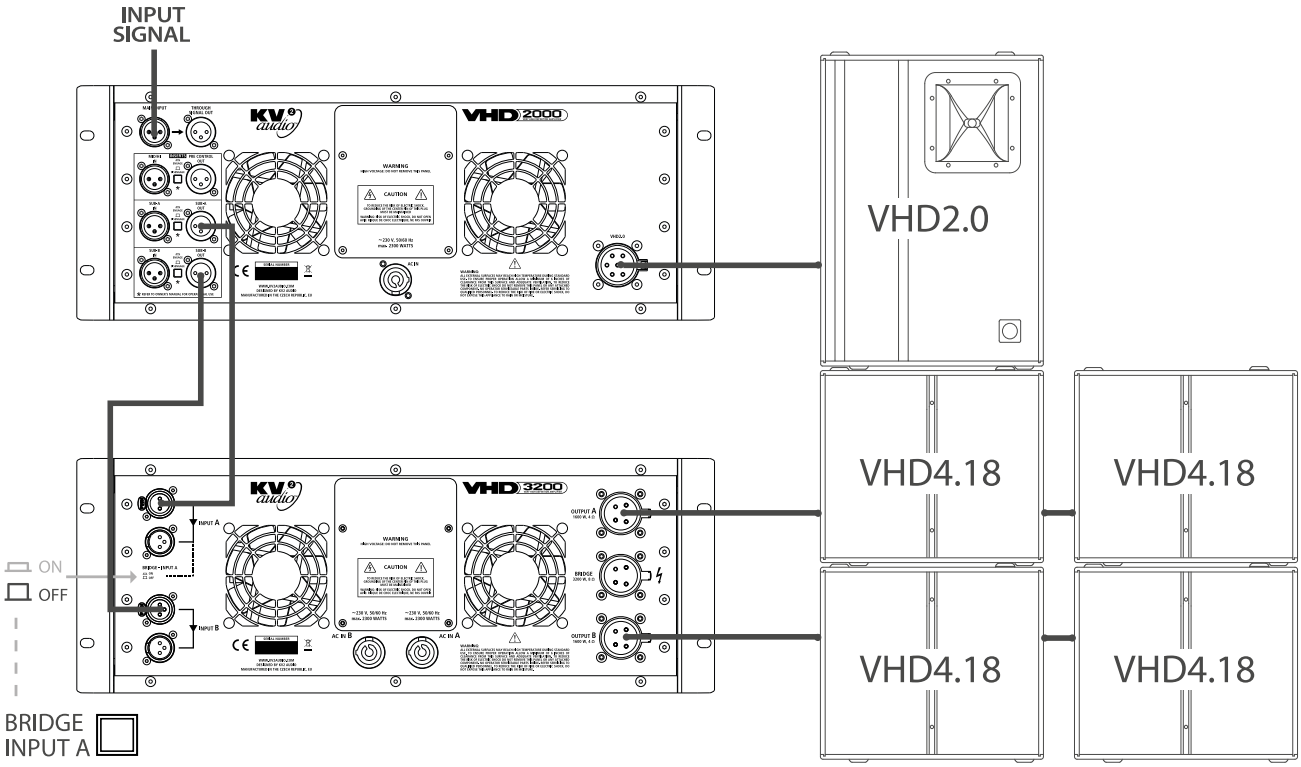

Sub Setting 3

Front panel VHD2000 Setup

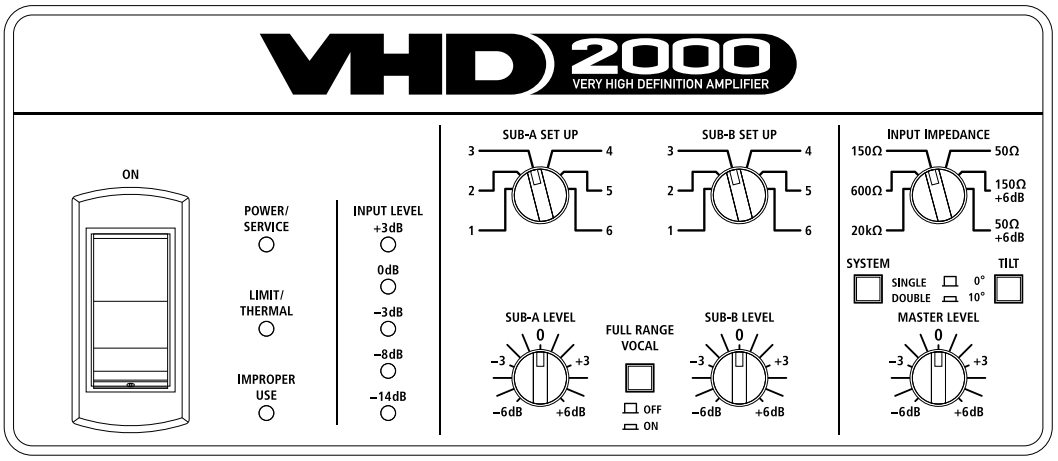

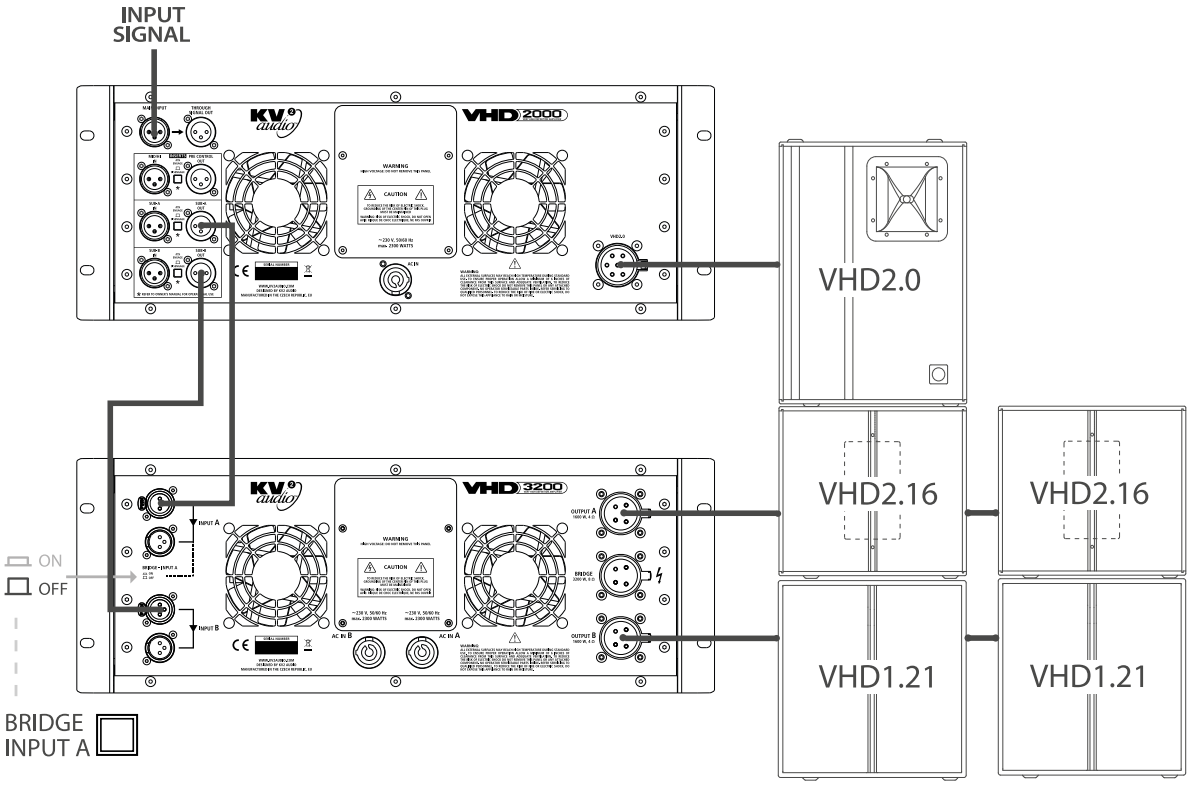

Sub Setting 4

Front panel VHD2000 Setup

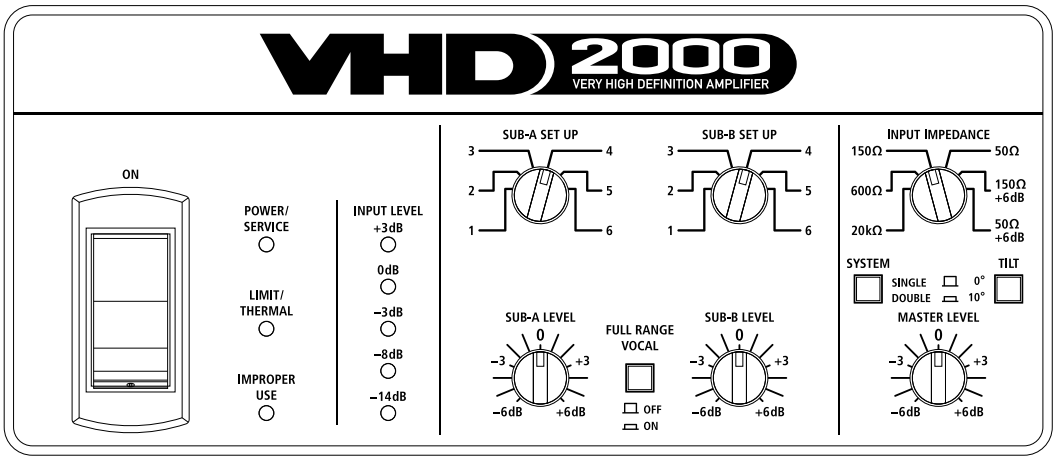

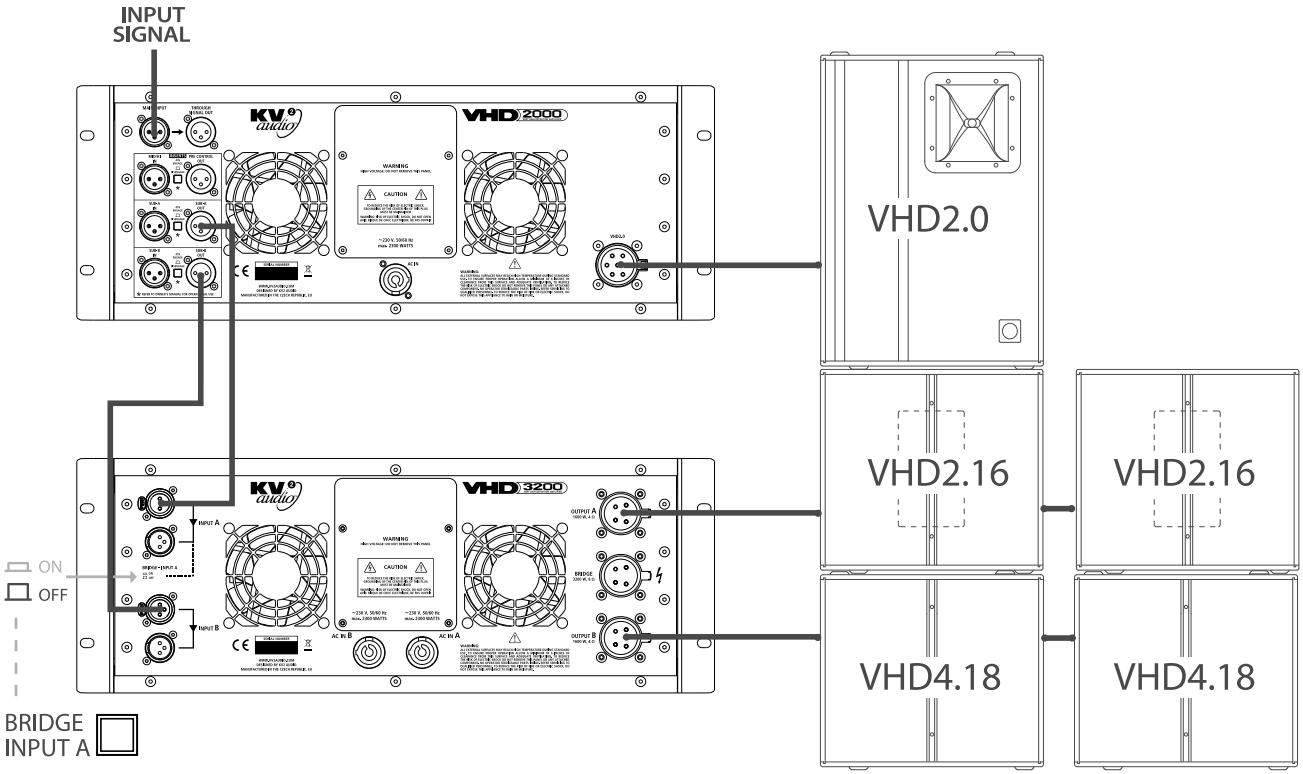

Sub Setting 5

Front panel VHD2000 Setup

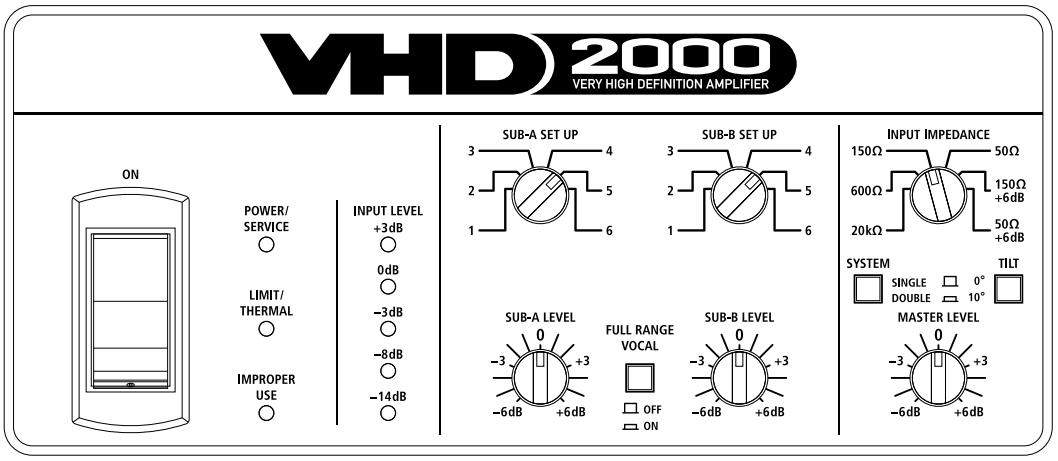

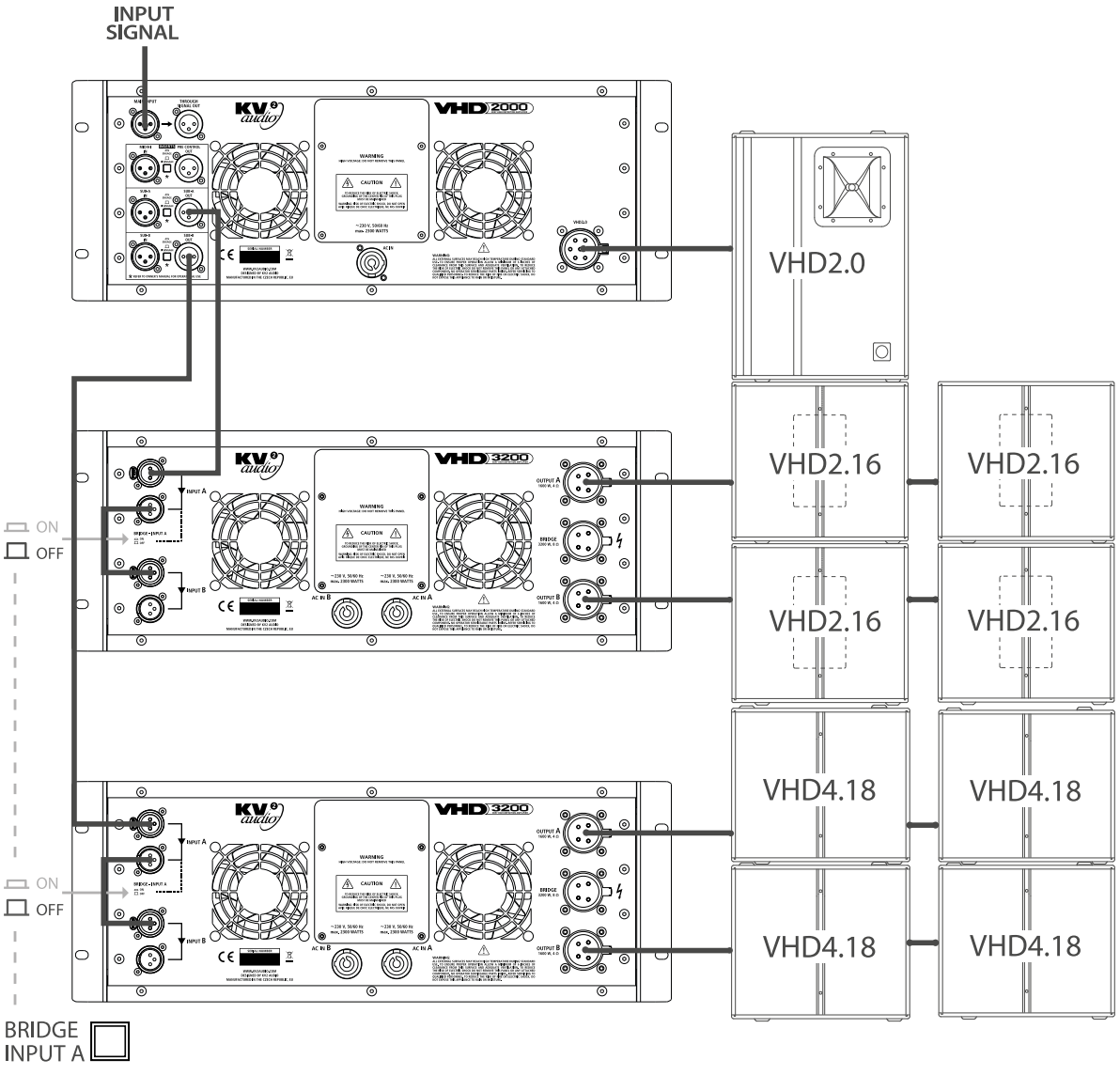

Sub Setting 6

Front panel VHD2000 Setup

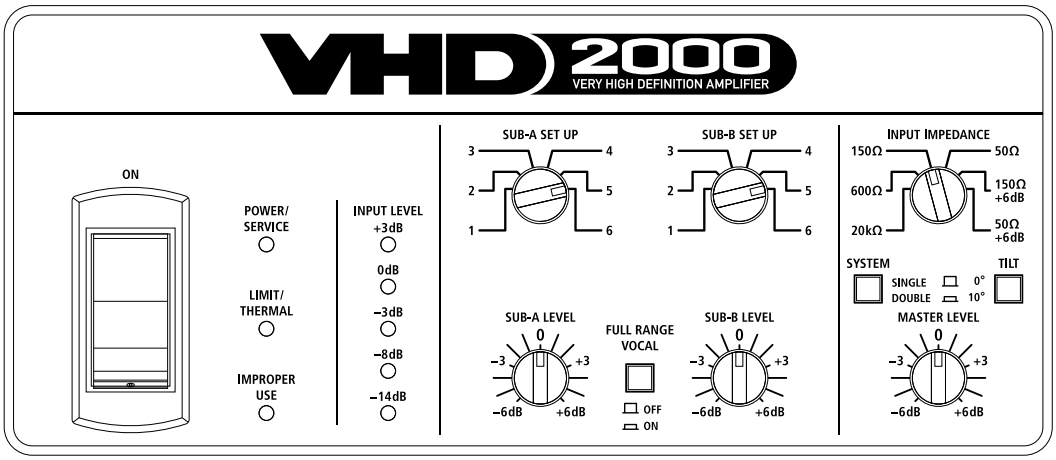

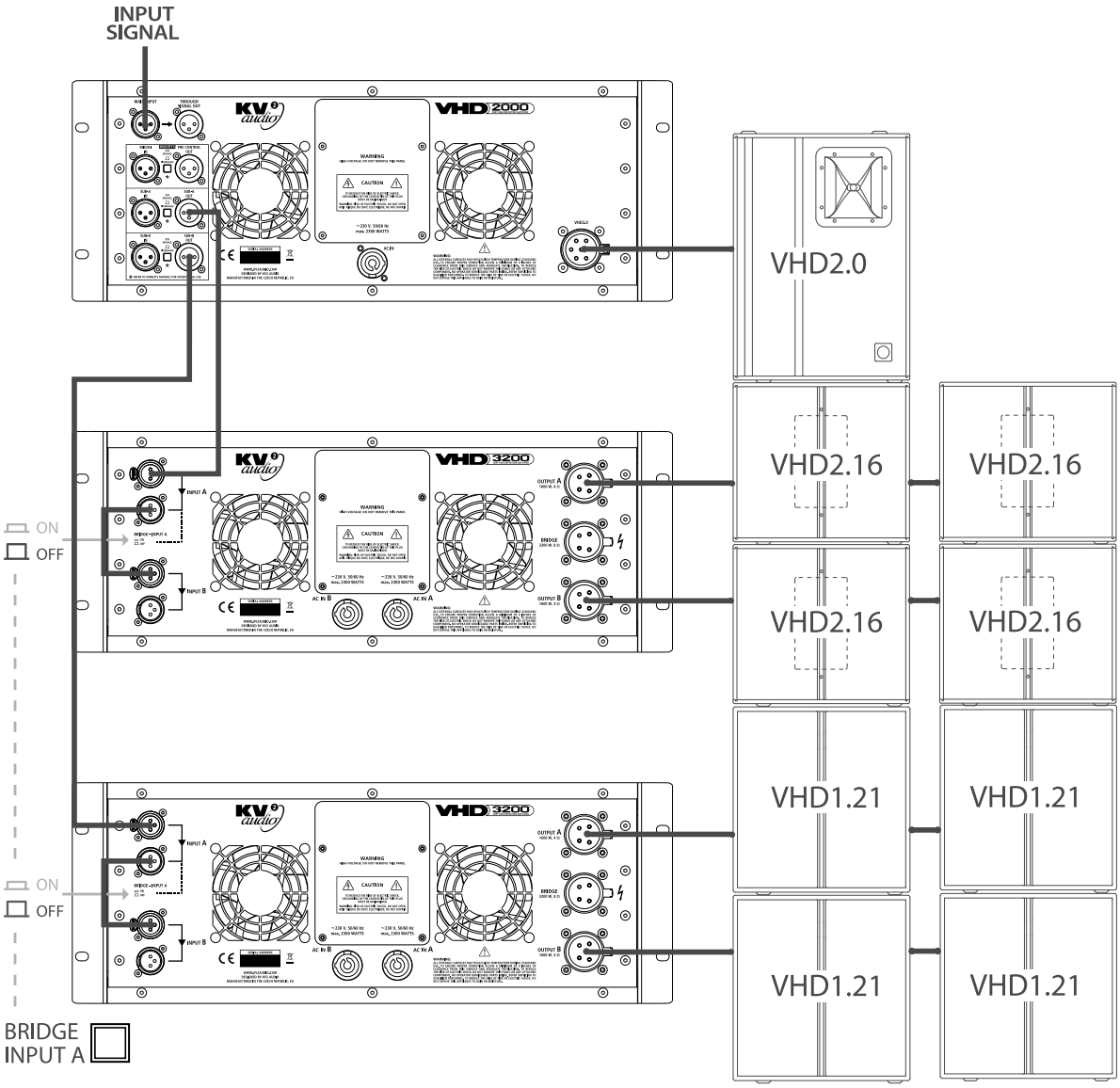

VHD3200
VERY HIGH DEFINITION AMPLIFIER

VHD3200 - part number KVV 987 176 (250 V)
KVV 987 083 (230 V)
KVV 987 084 (115 V)



Application

Specifically designed to drive all VHD, ES, SL subwoofer elements as part of the VHD and ES systems in a full rack mount module

- Portable PA
- Fixed installations

Introduction

The VHD3200 is a rack mounted subwoofer amplifier. The unit contains two separate 1600 W amplifiers with individual power supplies, signal paths and inputs and outputs within a single four rack space chassis. It can be used in bridged mode to provide full power for one channel mode. This unit acts as a slave for the VHD2000, which provides audio and control signal. It can also be used with the EPAK2500/R when used in combination with KV2 Audio ES systems and power the associated ES subwoofer systems.

Although this unit is simple to operate improper use can be dangerous. This is a very high powered device that can put out high voltages and sizable currents. Always use safe operating techniques with the VHD3200.

FOR YOUR SAFETY, READ THE IMPORTANT PRECAUTIONS SECTION AS WELL AS THE INPUT, OUTPUT AND POWER CONNECTION SECTIONS OF THIS MANUAL.

Front Panel:

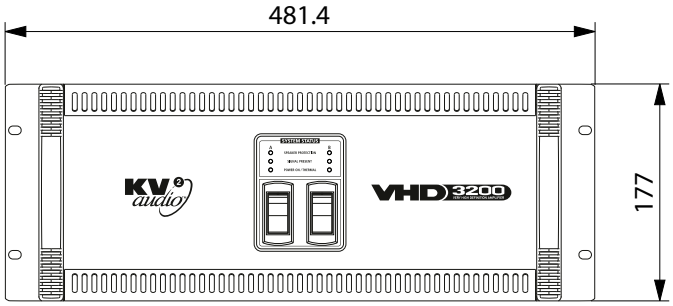

Rear Panel:

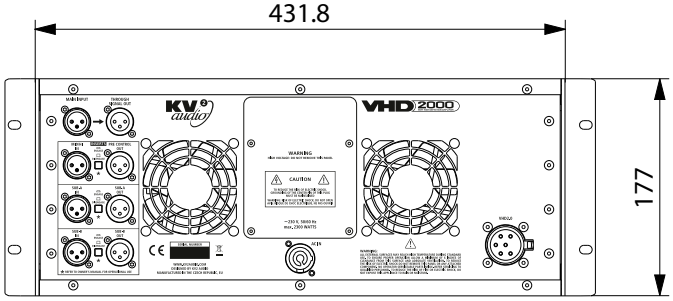

Side Panel:

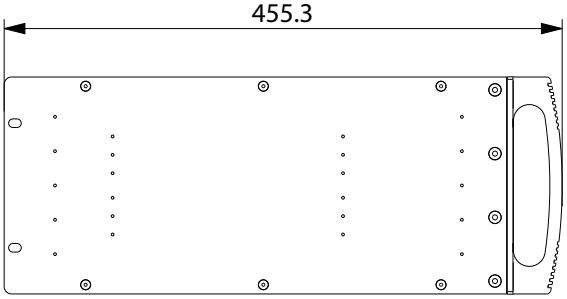

Unpacking

Unpack the VHD3200 and check to see if there is any damage to it. If you find any damage notify your supplier immediately. Only the consignee may institute a claim with the carrier for damage incurred during shipping. Be sure to save the carton and all packing materials for the carrier's inspection.

Should you ever need to ship the unit, only use the original factory packaging. If the shipping carton is unavailable, contact your supplier to obtain a replacement.

The VHD3200 carton should contain:

- VHD3200 amplifier control unit
- User Guide
- PowerCon detachable power cable

Rack Mounting

VHD3200's will mount in standard 19" rack systems. Integral rear mounting rack ears are also provided for additional support, do not rely on fixing and mounting the VHD3200 using just the front panel as support. Use eight screws and washers to mount the amplifier to the equipment rack rails (four for the front and four for the rear). We recommend using a shock mounted rack for touring use to prolong the life of your VHD3200.

Cooling

The VHD3200 has a comprehensive cooling system featuring chassis-sealed PCB board mounting and shock mounted, speed controlled fans. This means that the cooling system never drives air across PCB boards, connectors or components ensuring prolonged electronic component lifespan and minimizing maintenance cycles.

Air is drawn into the front of the amplifier by the two fans on the rear panel, this passes over the cooling fins of the heat sinks and exhausts through the rear. If the heat sink gets too hot, its sensing circuit will open the output relay, disconnecting the load.

It is important to have an adequate air supply at the front of the amplifier, and enough space around the rear of the amplifier to allow the cooling air to escape. If the unit is rack mounted, do not use doors or covers on the rear of the rack; the exhaust air must flow without restriction. If you are using racks with closed backs, use fans on the rear rack panel to ensure an ample air supply.

IMPORTANT! Please note that for correct full performance of the unit AND ANY WARRANTY COVER, it is important that regular maintenance of the front vents and filters as well as the rear panel fans be inspected and cleaned by removing any dust and debris build-up. Any product failure due to lack of attention in this matter will immediately void any current warranty. (Please refer to notes re ventilation procedures).

AC Requirements

Two PowerCon cables are provided to connect the VHD3200 to a suitable AC power supply.

The PowerCon is a connector without breaking capacity, i.e. the PowerCon should not be connected or disconnected under load or while it is live. Always isolate your AC supply before disconnecting the PowerCon connector.

Your VHD3200 will be supplied pre set to the voltage used in your area. The table below provides typical current draw figures for the VHD3200.

AC Input	Current draw with amplifier running at Average Power (Each Channel)	Current draw with amplifier running at Peak Power (Each Channel)
250 V	5.5 A	11 A
230 V	6 A	12 A
115 V	12 A	24 A

Remember that if you are connecting both AC cables for the VHD3200 to the same AC power source then you will need to have double the per channel current available.

Front panel

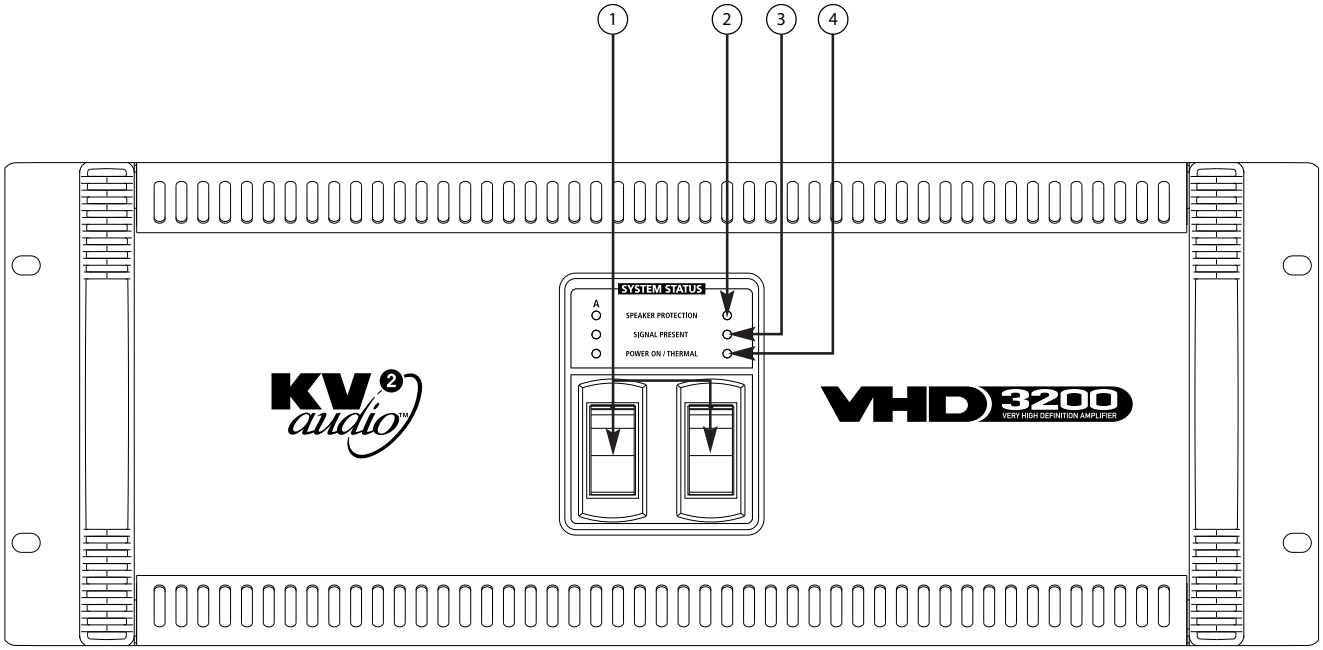

1) AC Mains Switch

The VHD3200 has combination AC Mains switch/circuit breakers on the front panel. If either of the switches shuts off during normal use, push it back to the ON position once. If it will not stay on you should take the unit to qualified service personnel tohave it serviced.

2) Speaker Protection

These yellow LED's indicate when the audio speaker protection limiter has been activated for that particular channel of the amplifier.

3) Signal Present

These green LED's indicate when signal is present at the Input to that particular channel of the amplifier.

4) Power On / Thermal

These are dual colour LED's. When green they indicate that the Power Switch is On and that channel of the amplifier is powered up. When red they indicate that that channel has overheated and shut down. The unit will Auto Reset after it cools down to a safe operating temperature.

Rear panel

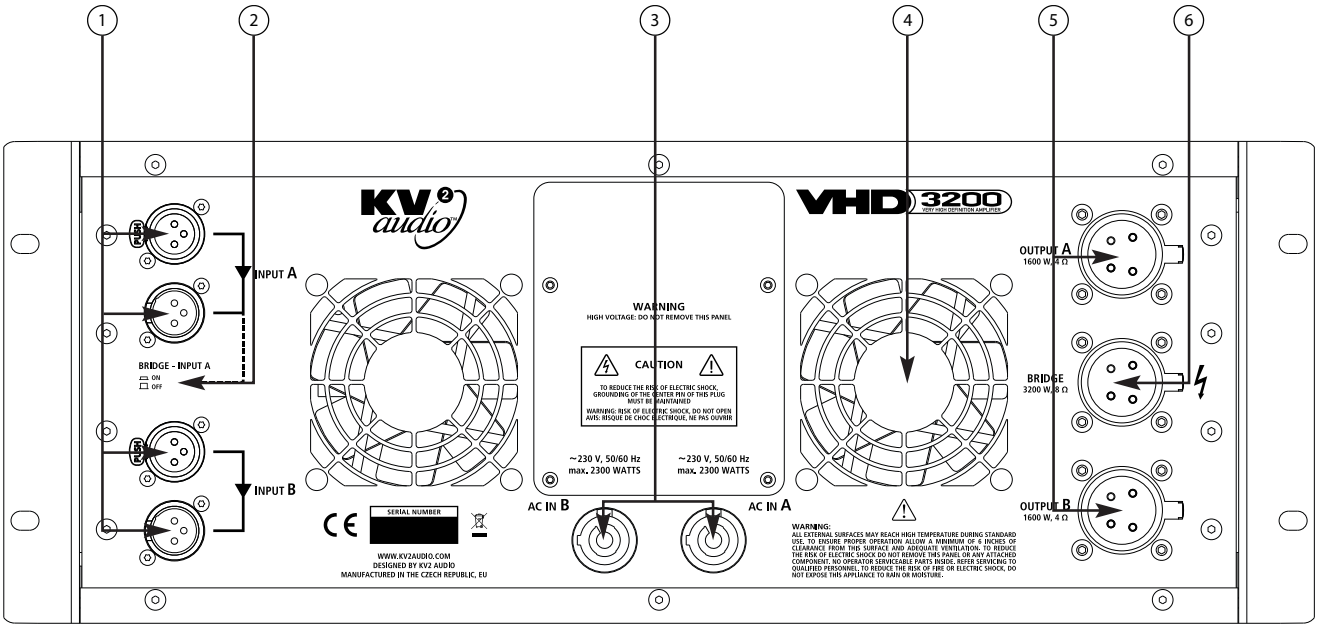

1) Main Input A/B

These are the input connectors for channels A & B with associated 'Through Output' connectors for sending signal to other devices.

2) Bridge Mode Switch

When running VHD3200 in bridge mode (bridge switch pressed), Input A serves as a bridge mode input, bridge output (6) serves as speaker output. Input B provides phase reversed Input A signal.

3) PowerCon Power Connectors

One for each channel of the VHD3200 both must be connected to operate both channels of the VHD3200. They accept standard PowerCon terminated AC Mains cables.

4) Fans

The cooling fans operate continuously while the VHD3200 is on. An internal temperature sensor increases the speed of the fans during high temperature conditions. Air enters through the front grille and exits through the rear. Be sure to allow adequate air flow to the front of the rack in which the VHD3200 is mounted.

5) AP4 Connectors

One for each channel of the VHD3200. They accept standard AP4 terminated loudspeaker cables.

6) Bridge Mode AP4 Connector

Output channel of the VHD3200 when running in bridge mode. Accepts standard AP4 terminated loudspeaker cables. Do not connect other speakers to speakers output A and output B in bridge mode.

Operation

The VHD3200 is designed to be used either with the VHD2000 or the EPAK2500/R controller amplifiers and to power only certain combinations of KV2 Audio Subwoofers. Because of its unique design it cannot be used as a standard power amplifier to power any other loudspeakers without the possibility of damage occurring. The various VHD2000 combinations are shown in the following table:

Amplifier / Controller Setting	Sub-A Out	Sub-B Out
VHD2000 Setting 1	2× VHD2.16 (1× 2.15)	2× VHD2.16 (1× 2.15)
VHD2000 Setting 1B	2× VHD2.16 (1× 2.15)	1× VHD2.21
VHD2000 Setting 2	2× VHD4.18	2× VHD4.18
VHD2000 Setting 3	2× VHD2.16 (1× 2.15)	2× VHD1.21
VHD2000 Setting 4	2× VHD2.16 (1× 2.15)	2× VHD4.18
VHD2000 Setting 5	4× VHD2.16 (2× 2.15)	4× VHD4.18
VHD2000 Setting 6	4× VHD2.16 (2× 2.15)	4× VHD1.21

Settings 1B, 5 and 6 require 2× VHD3200 amps

Please refer to the VHD2000 or the EPAK2500/R manuals for further information on setting up these systems.

Specifications

Output Channels	
Number of Channels	2
Voltage Gain	37 dB
Out. Power 4 Ω - 1 channel / 2 channels loaded	1600 W / 1600 W (RMS)
Out. Power 8 Ω - bridged	3200 W (RMS)
Low Frequency Amplifier Specification	
Type	High efficiency, Current-Enhancing, Switched-Rail Amplifier
Distortion	<0.05%
Operating Bandwidth	20 Hz to 100 Hz
Signal Input	
Input Sensitivity	1.0 V RMS
Input Impedance	20 kΩ (balanced)
Signal Output	Main Through OUT
Speaker Output	
Speaker Output	2× AP4 (1× AP4 bridge)
Features	
System setup	Limiter / Short protection
Power	
Power Connector	2× Neutrik PowerCon®
Operating Voltage	115 V / 230 V / 250 V
Operating Voltage Range	100 to 120 V @ 60 Hz | 205 to 240 V @ 50 Hz | 225 to 260 V @ 50 Hz
Recommended Amperage	2× 20 A 115 V | 2× 10 A 230 V | 2× 10 A 250 V
Soft Start	YES
Protection	Thermal breaker
Cooling	2× temperature controlled fans
Physical Dimensions	
Height	177 mm (7.0"), 4RU
Width	481.4 mm (18.9")
Depth	455.3 mm (17.9")
Weight	35 kg (88 lb)

Warranty

Your VHD Amplifiers is covered against defects in material and workmanship.

Refer to your supplier for more details.

Service

In the unlikely event that your VHD Amplifiers develops a problem, it must be returned to an authorized distributor, service centre or shipped directly to our factory. Because of the complexity of the design and the risk of electrical shock, all repairs must be attempted only by qualified technical personnel.

If the unit needs to be shipped back to the factory, it must be sent in its original carton. If improperly packed, the unit may be damaged.

To obtain service, contact your nearest KV2 Audio Service Centre, Distributor or Dealer.

The Future of Sound.
Made Perfectly Clear.

KV2 Audio International
Nádražní 936, 399 01 Milevsko
Czech Republic

Tel.: +420 383 809 320
Email: info@kv2audio.com

www.kv2audio.com

KVV120119-00-06-0