ESR Series
User Guide

ESR2800 · ESR212
ESR3000MkII · ESR215MkII · ESR215S



The Future of Sound. Made Perfectly Clear.

At KV2 Audio our vision is to constantly develop technologies that eliminate distortion and loss of information providing a true dynamic representation of the source.

Our aim is to create audio products that absorb you, place you within the performance and deliver a listening experience beyond expectations.

Important Safety Instructions

Before using your ESR Series, be sure to carefully read the applicable items of these operating instructions and the safety suggestions.

1. **Read all product instructions.**
2. **Keep printed instructions, do not throw away.**
3. **Respect and rewiew all warnings.**
4. **Follow all instructions.**
5. **Do not use this unit near water, in unprotected out door areas or in rain or wet conditions.**
6. **Clean only with dry cloth.**
7. **Do not block any ventilation openings.**
8. **Install in accordance with KV2 Audio's recommended installation instructions.**
9. **Do not install near any heat sources such as heat radiators, heat registers, stoves or other apparatus that produce heat.**
10. **Do not defeat the safety purpose of the grounding type plug. A grounding type plug has two blades and a third grounding connector. The third connector is provided for your safety. If the provided plug does not fit into your outlet, consult an electrician for replacement of the obsolete outlet.**
11. **Protect the power cord from being walked on or pinched, particularly at plugs, convenience receptacles. The AC mains plug or appliance coupler shall remain readily accessible for operation.**
12. **Only use accessories specified by KV2 Audio.**
13. **Install the product only with rigging specified by KV2 Audio, or sold with the loudspeaker.**
14. **Unplug this loudspeaker during lightning storms or when unused for long periods of time.**
15. **Refer all servicing to qualified service personnel. Servicing is required when the loudspeaker has been damaged in any way, such as when the power-supply cord or plug has been damaged; liquid has been spilled or objects have fallen into the loudspeaker; rain or moisture has entered the loudspeaker; the loudspeaker has been dropped; or when for undetermined reasons the loudspeaker does not operate normally.**
16. **Do not remove front or back panels. Removal of the panel will expose hazardous voltages. There are no user serviceable parts inside and removable may void the warranty.**
17. **An experienced user shall always supervise this professional audio equipment.**

CAUTION: TO REDUCE THE RISK OF ELECTRIC SHOCK, DO NOT REMOVE THE PANELS.
NO USER-SERVICEABLE PARTS INSIDE. REFER SERVICING TO QUALIFIED PERSONNEL.

WARNING: To prevent fire or electric shock, do not expose this equipment to rain or moisture.

SAFETY SUMMARY

To reduce the risk of electric shock, disconnect the loudspeaker from the AC mains before installing audio cable. Reconnect the power cord only after making all signal connections. Connect the loudspeaker to a twopole, three- wire grounding mains receptacle. The receptacle must be connected to a fuse or circuit breaker. Connection to any other type of receptacle poses a shock hazard and may violate local electrical codes. Do not allow water or any foreign object to get inside the loudspeaker. Do not put objects containing liquid on or near the unit. To reduce the risk of overheating the loudspeaker, avoid exposing it to direct sunlight. Do not install the unit near heat-emitting appliances, such as a room heater or stove. This loudspeaker contains potentially hazardous voltages. Do not attempt to disassemble the unit. The unit contains no user serviceable parts, repairs should be performed only by factory trained service personnel.

Content

Introduction ESR Series / ESR Brackets and Flybars **5 - 6**

Introduction 5 - 6

ESR2800/3000MkII **7**

Overview 7
Getting Started 8 - 9
Features - Front panel 10
Features - Rear panel 11 - 12
Using the System - ESR2800 13 - 14
Using the System - ESR3000MkII 15 - 16
Specifications 17 - 18
Block Diagram 19 - 20
Drawing 21 - 22

ESR212 **23**

Overview 23
Technology 24
Specifications 25
Frequency characteristics 26
Drawing 27

ESR215MkII **28**

Overview 28
Technology 29
Specifications 30
Frequency characteristics 31
Drawing 32

ESR215S **33**

Overview 33
Specifications 34
Frequency characteristics 35
Drawing 36

Accessories **37 - 39**

ESR Brackets and Flybars · Instructions **40**

Warranty · Service **41**

Notes **42**

Introduction

Thank you for purchasing this KV2 Audio, ESR Series system, consisting of the ESR2800/3000MkII stereo controller/amplifier unit, two ESR212/215MkII speakers and optional variants of subwoofers.

The ESR range has been developed for a particular niche in the market, where an all in one box is needed to give clear detailed reproduction over a wide area. The ESR212 and 215MkII are three way full range enclosures with wide dispersion characteristics. They can be used vertically for theatre, church or cultural centre type installations, or horizontally mounted to give excellent coverage over a tiered seating area for stadium or grandstand type applications.

Similar to our popular ES range, the ESR cabinets are fully active and driven by a proprietary amplifier, which delivers equalized, and time aligned accurate signal to each of the components. Two ESR212 cabinets can be driven by a single ESR2800 High Definition Amplifier (analogically with ESR215MkII's and ESR3000MkII), which houses all signal processing and amplification, as well as providing control for two different external subwoofer cabinet configurations if required.

In situations where extended bass response is not needed, but full range high definition audio reproduction with extremely good coverage is required, the ESR Range offers an ideal solution. Economies of scale are achieved by the requirement of only one ESR amplifier, to run a three way active stereo system where other systems would require processors and multiple amplifiers to achieve a similar configuration.

This manual contains important information on operating the ESR system correctly and safely. Please take some time and read this manual to familiarize yourself with the advanced features of this system.

The ESR2800/3000MkII Amplifier is a three-way, active control and amplification system, specifically designed for the KV2 Audio ESR series loudspeaker systems. It houses all signal processing and amplification, as well as providing control for external subwoofer cabinet configurations, and to operate additional subwoofer cabinets if needed. External subwoofers are powered by the external subwoofer amplifier (VHD3200).

The amplifier compliment and configuration inside the ESR2800/3000MkII Amplifier is as follows:

High Frequency - 100-watt, Class AB, Push pull, Low intermodulation design.
Mid Frequency - 200-watt, Class AB, Push pull, Low intermodulation design.
Low Frequency - 1000-watt, High-efficiency, Current-enhancing switch mode technology with Linear Active Filter.

In most cases it would be advisable to use a KV2 Audio Line driver (LD4) in addition at the mixer end, to ensure that the line to the amplifier is driven correctly and the signal integrity maintained.

Although this system is simple to operate, improper use can be dangerous. This is a very high-powered device that can put out high voltages and sizeable currents. Always use safe operating techniques with the ESR Series system.

Important notice

As part of KV2's constant programme of improvement and upgrades, there are now two versions of the ESR215 and ESR3000. The current version are identified as ESR215MkII and ESR3000MkII, (with serial numbers that start from **B26Q010159** for the ESR215MkII and all ESR3000MkII amplifiers begin with the serial numbers **A16P090091**.

The Technical differences between old and new ESR215MkII are:

The original version is complemented with 4 OHM woofers and are **wired internally in series**.
The new version MkII has 16 OHM woofers and are **wired in parallel**.
It is important to use new version of ESR3000MkII amplifiers with ESR215MkII for correct response and operation and not to mix old and new.

FOR YOUR SAFETY, READ THE IMPORTANT PRECAUTIONS SECTION AS WELL AS THE INPUT, OUTPUT AND POWER CONNECTION SECTIONS OF THIS MANUAL.

Introduction

This manual is presented by KV2 Audio, to enable the clear and precise instructions for the safe practice and execution of overhead suspension, or flying of the KV2 Audio ESR Full range Loudspeaker products, using the ESR BRACKETS and FLYBARS.
It is vitally important that operators and users familiarize themselves with all of the components, parts, products and safety instructions, as described and indicated within this document, before attempting any overhead suspension of the ESR Brackets and Flybar systems.
The ESR Loudspeaker enclosures are designed with integral suspension points to facilitate secure vertical and Horizontal suspension and rigging, providing that no modifications or external parts are substituted, and that all instructions are adhered to at all times.
KV2 Audio s.r.o operates a continuing process policy of attaining and improving standards.
This means that instructions and methods may be subject to change without notification, and it is the sole responsibility of the operator/user to check for any updated information regarding safe stacking and flying procedures whether locally or Internationally.

Warning - Safety Rigging

There are accepted 'General Rigging Practices' appropriate to the entertainment industry and this Document aims to encapsulate them specifically to the safe vertical and horizontal suspension of the KV2 ESR Loudspeaker systems described here.
It is extremely vital and important that only personnel whom have the qualifications and certificates, Prior knowledge and experience of rigging techniques, attempt the execution of any suspension configuration utilizing the ESR Brackets and Flybars for the KV2 ESR products.
All advice and instructions expressed and stated within this document, are based upon the highest engineering data available at the time of publication, from within the Country of manufacture, with regards to materials and general practice techniques.
Specifications are subject to change, due to constant testing, product updates and refinements and R&D.
'General Rigging Practices' means that Regulations and requirements are possibly subject to alterations in different countries and may be superseded locally.
KV2 Audio, as such is not responsible for the safety of any suspension, flying overhead of all specific KV2 Audio Loudspeaker products, or Rigging configurations as executed in practice by users.
It is expressly the sole responsibility of the user to ensure that at all times any KV2 Audio product, or system is Ground stacked, suspended and rigged in accordance with current International and local regulations.
All non KV2 Audio products such as hoists, clamps, wires, truss, supports used, or required to assure stability, or suspend KV2 Audio Loudspeaker product are the sole responsibility of the user.

Warranty

Your ESR Brackets and Flybars are covered against defects in material and workmanship.
Refer to your supplier for more details.

Service

In the unlikely event that your ESR Brackets and Flybars develop a problem, it must be returned to an authorized distributor, service center or shipped directly to our factory. Because of the complexity of the design, only qualified technical personnel must attempt all repairs.

If the unit needs to be shipped back to the factory, it must be sent in its original carton, or suitable alternatives. If improperly packed, the unit maybe damaged in transit.

To obtain service, contact your nearest KV2 Audio Service Centre, Distributor or Dealer.

ESR2800 Amplifier Rack mounted

ESR2800 - part number KVV 987 285 (250V)
KVV 987 283 (230V)
KVV 987 284 (115V)

ESR3000MkII Amplifier Rack mounted

ESR3000MkII - part number KVV 987 277 (250V)
KVV 987 276 (230V)
KVV 987 275 (115V)





Application

Intentionally designed for use in Theatres and Cultural Centers to provide the highest audio quality from single Column enclosures for stage sides and prosceniums for medium to larger venues

- Fixed Installations
- Music venues
- Classical and opera concerts

Introduction

The ESR2800/3000MkII is three-way, active control and amplification system specially designed for the KV2 Audio ESR full range series loudspeaker systems. It houses all signal processing and amplification, as well as providing control and crossover function an external subwoofer cabinet if needed utilizing an external amplifier. The ESR2800 powers the ESR3000MkII powers the ESR215MkII. Each unit incorporates six amplifiers consisting of two 100-watt, Class AB, push pull, low intermodulation amplifier for high frequencies, two 200-watt, Class AB, push pull, low intermodulation design for mids and two a 1000-watt, high-efficiency, current- enhancing switch mode technology amplifier for bass. The ESR2800/3000MkII stereo configuration powers two ESR cabinets accordingly.

Features

The amplifier compliment inside the ESR2800/3000MkII Amplifier is as follows:

- High Frequency - 2x 100-watt, Class AB, push pull, low intermodulation design
- Mid Frequency - 2x 200-watt, Class AB, push pull, low intermodulation design
- Low Frequency - 2x 1000-watt, high-efficiency, current-enhancing switch mode

Unpacking

Unpack the ESR2800/3000MkII Amplifier and check for any damage. If you find any damage, notify your supplier immediately. Only the consignee may institute a claim with the carrier for damage incurred during shipping. Be sure to save the carton and all packing materials for the carrier's inspection. Should you ever need to ship the unit, only use the original factory packaging. If the shipping carton is unavailable, contact your supplier to obtain a replacement.

The ESR2800/3000MkII Amplifier carton should contain:

- ESR2800/3000MkII Amplifier control unit
- This user guide
- Two PowerCon detachable power cables

Amplifier rack mounting

The ESR2800/3000MkII Amplifier is 4 rack units in height and will mount in standard 19" rack systems. Integral rear mounting rack ears are also provided for additional support, do not rely on fixing and mounting the amplifier using just the front panel as support. Use eight screws and washers to mount the amplifier to the equipment rack rails. We recommend using a shock mounted rack for touring use to prolong the life of your amplifier.

ESR 2800 VERY HIGH DEFINITION AMPLIFIER

Front Panel:

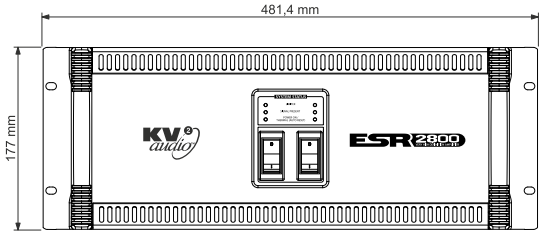

Rear Panel:

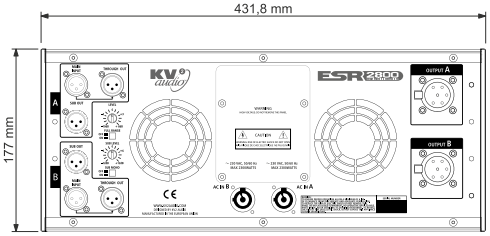

Side Panel:

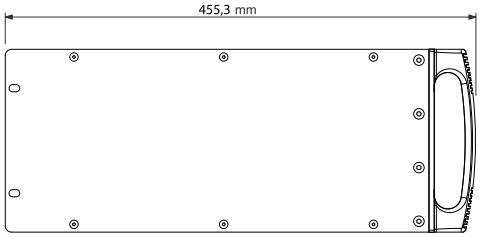

ESR 3000 MkII VERY HIGH DEFINITION AMPLIFIER

Front Panel:

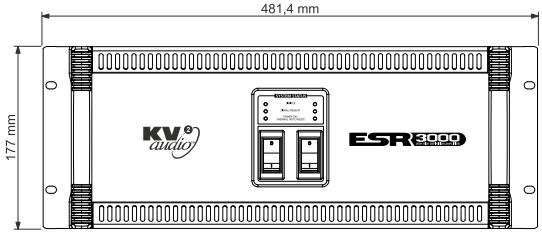

Rear Panel:

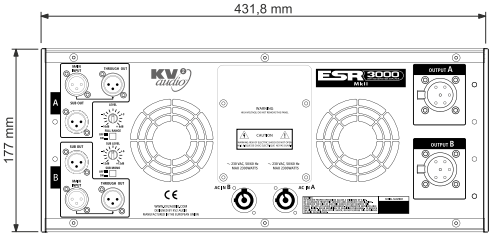

Side Panel:

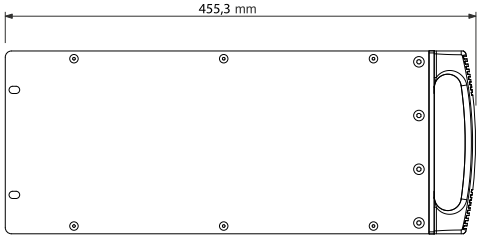

Cooling

The ESR2800/3000MkII Amplifier has a comprehensive cooling system featuring chassis sealed PCB board mounting and shock mounted, speed controlled fans. This means that the cooling system never drives air across PCB boards, connectors or components, ensuring prolonged electronic component lifespan and minimizing maintenance cycles.

Air is drawn into the front of the amplifer by the two fans on the rear panel, this passes over the cooling fans of the heat sinks and exhausts through the rear. If the heat sink gets too hot, its sensing circuit will open the output relay, disconnecting the load.

It is important to have an adequate air supply at the front of the amplifier, and enough space around the rear of the amplifier to allow the cooling air to escape. If the unit is rack mounted, do not use doors or covers on the rear of the rack, the exhaust air must flow without restriction. If you are using racks with closed backs, use fans on the rear rack panel to ensure an ample air supply.

IMPORTANT! Please note that for correct full performance of the unit AND ANY WARRANTY COVER, it is important that regular maintenance of the front vents and filters as well as the rear panel fans be inspected and cleaned by removing any dust and debris build-up. Any product failure due to lack of attention in this matter will immediately void any current warranty. (Please refer to notes re ventilation procedures).

AC Requirements

Two PowerCon cables are provided to connect the ESR2800/3000MkII Amplifier to a suitable AC power supplies. Each cable powers each separate amplifier channel for sufficient current delivery.

THE ESR2800/3000MkII REQUIRES A GROUND CONNECTION. ALWAYS USE A GROUNDED OUTLET AND PLUG.

The PowerCon is a connector without breaking capacity, i.e. the PowerCon should not be connected or disconnected under load or while it is live. Always isolate your AC supply before disconnecting the PowerCon connector.

The ESR2800/3000MkII amplifier operates in either 115V, 230V or 250V modes. Although pre-configured at the factory, the unit's operating voltage mode can be changed in the field. Amplifier power plug must remain readily operable.

Your amplifier will be supplied preset to the voltage used in your area. The table below provides typical current draw figures for the ESR2800/3000MkII Amplifier.

The receptacle must be connected to a fuse or circuit breaker. Connection to any other type of receptacle poses a shock hazard and may violate local electrical codes.

Do not allow water or any foreign object to get inside the amplifier. Do not put objects containing liquid on or near tne unit.
To reduce the risk of overheating the amplifier, avoid exposing it to direct sunlight.
Do not install the unit near heat-emitting appliances, such as a room heater or stove. This amplifier contains potentially hazardous voltages. Do not attempt to disassemble the unit. The unit contains no user serviceable parts, repairs should be performed only by factory trained service personnel.

AC Input	Current draw with amplifier running at Average Power (Each Channel)	Current draw with amplifier running at Peak Power (Each Channel)
250V	3.2A	5A
230V	3.5A	5.4A
115V	7A	11A

Current draw of ESR2800/3000MkII Amplifier

Front Panel ESR2800/3000MkII

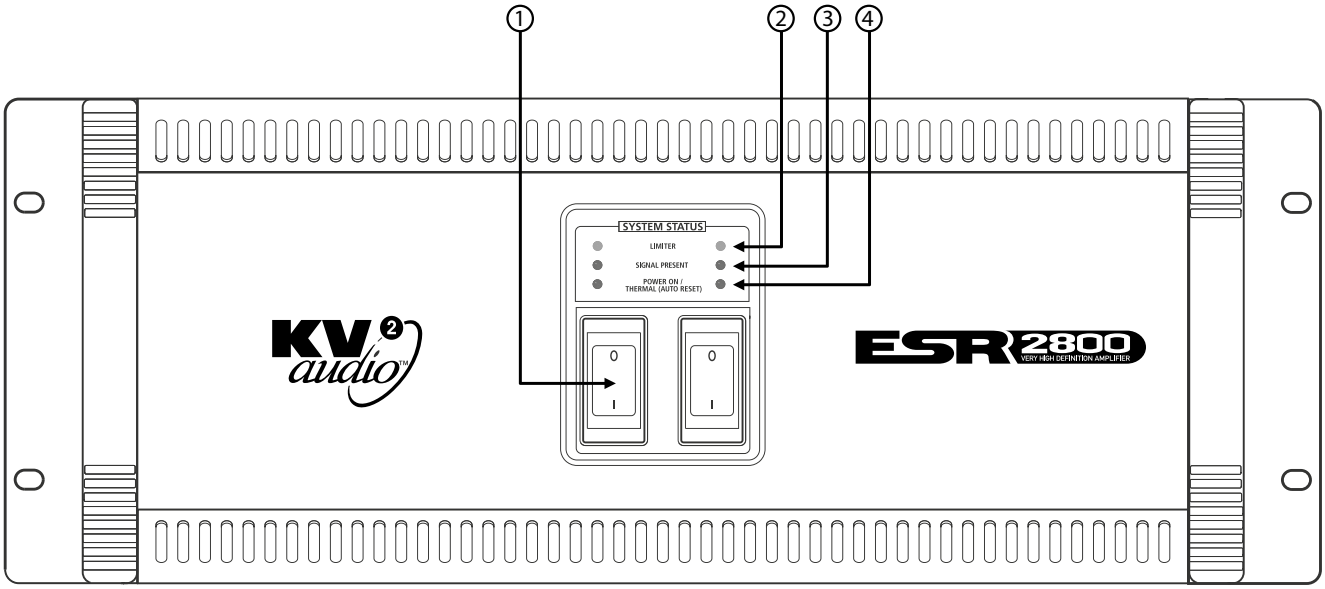

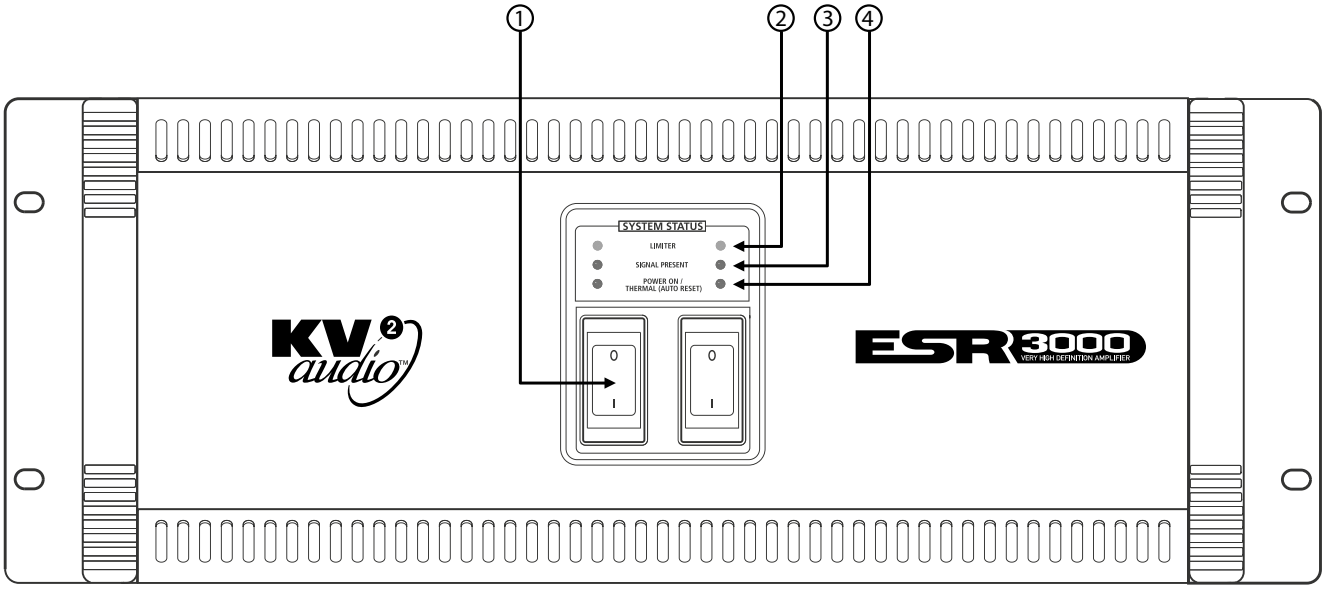

1) AC Mains Switch

The ESR2800/3000MkII Amplifier has a combination AC Main switch/circuit breaker on the front panel. If the switch shuts off during normal use, push it back to the ON position once. If it will not stay on you should take the unit to qualified service personnel to have it serviced.

2) Limiter

Yellow LED, indicates that the audio limiter has been activated. This RMS limiter protects speakers against overload.

3) Signal Present

Green LED indicates when audio signal is present at the amplifier input.

4) Power On / Thermal (Auto reset)

Green LED indicates that the AC power is on. When red, it indicates that the thermal limit of the ESR2800/3000MkII Amplifier has been exceeded and the unit has shut down.

Rear Panel ESR2800/3000MkII

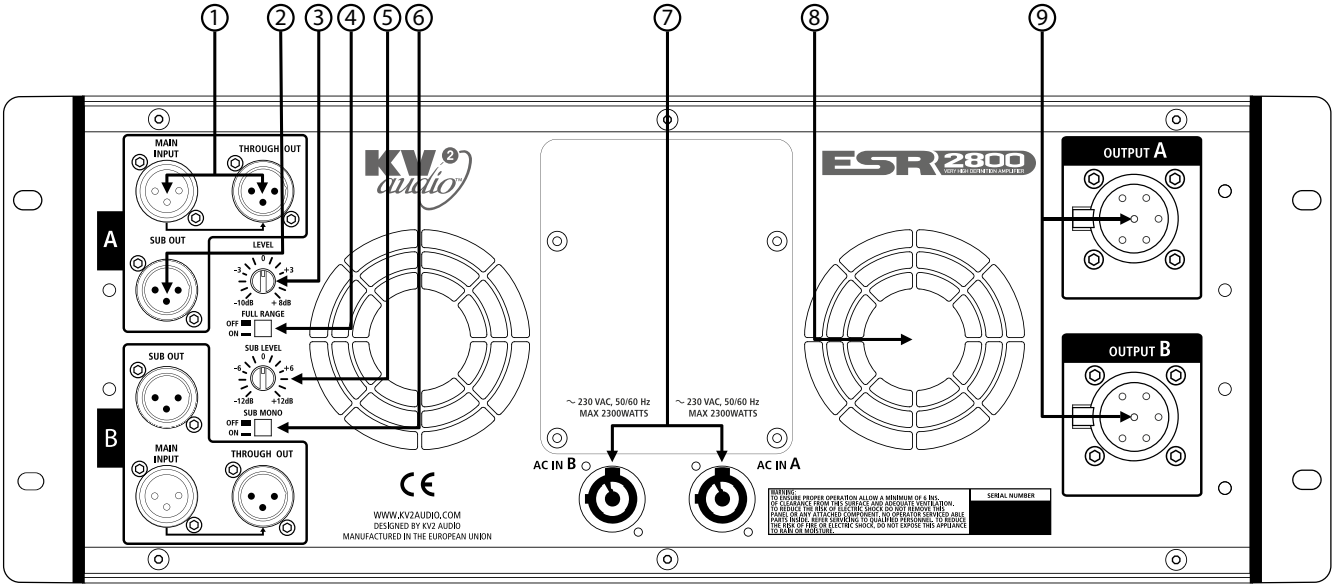

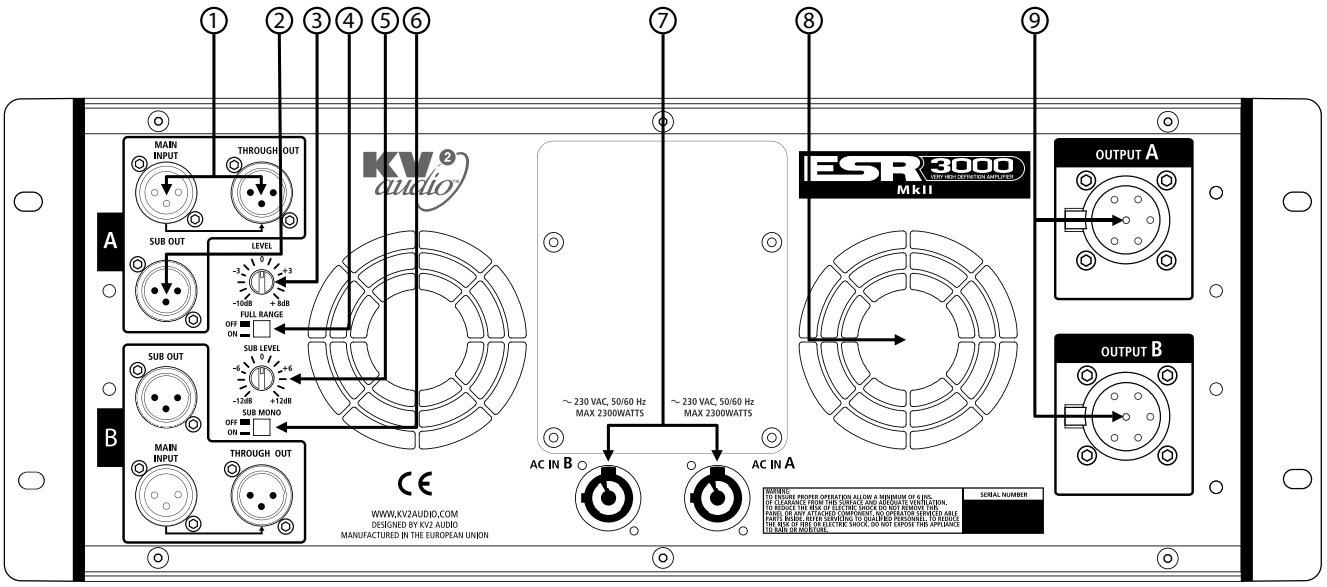

1) Main Input / Trough out

This is the main system input balanced XLR connector with associated Through Signal Output connector for sending unprocessed signal to other devices in a system.

2) Sub out

Balanced XLR output connector, used to connect additional subwoofer. Output is active even when FULL RANGE switch is ON.

3) Input level Adjustment

Input Level adjustment potentiometer that allows the user to adjust input levels from -10dB to +8dB.

4) Full Range

Switch, selects the amplifier crossover setup, when ON full range signal is reproduced by ESR215MkII cabinets, when OFF signal is by frequency band in conjunction with the subwoofer output setup.

Rear Panel ESR2800/3000MkII

5) Sub Level

This is the level control for the External Sub output in the range -6 to +6 dB.

6) Mono

Switch, sets SUB OUT outputs summing SUB OUT outputs channel A and B together.

7) Powercon Power Connectors

The ESR3000MkII Amplifier uses two connectors per two channel. Each connector supplies one channel. They accept standard PowerCon terminated AC Mains cables.

8) Fans

The cooling fans operate continuously while the amplifier is on. An internal temperature sensor increases the speed of the fans during high temperature conditions. Air enters through the front grille and exits through the rear. Be sure to allow adequate air flow to the front of the rack in which the ESR3000MkII Amplifier is mounted.

9) Speaker AP6 Connectors

Accepts a standard AP6 terminated loudspeaker cable for connecting up to a single ESR215MkII cabinet. We recommend using 2.5mm/core cables.

Full range setup

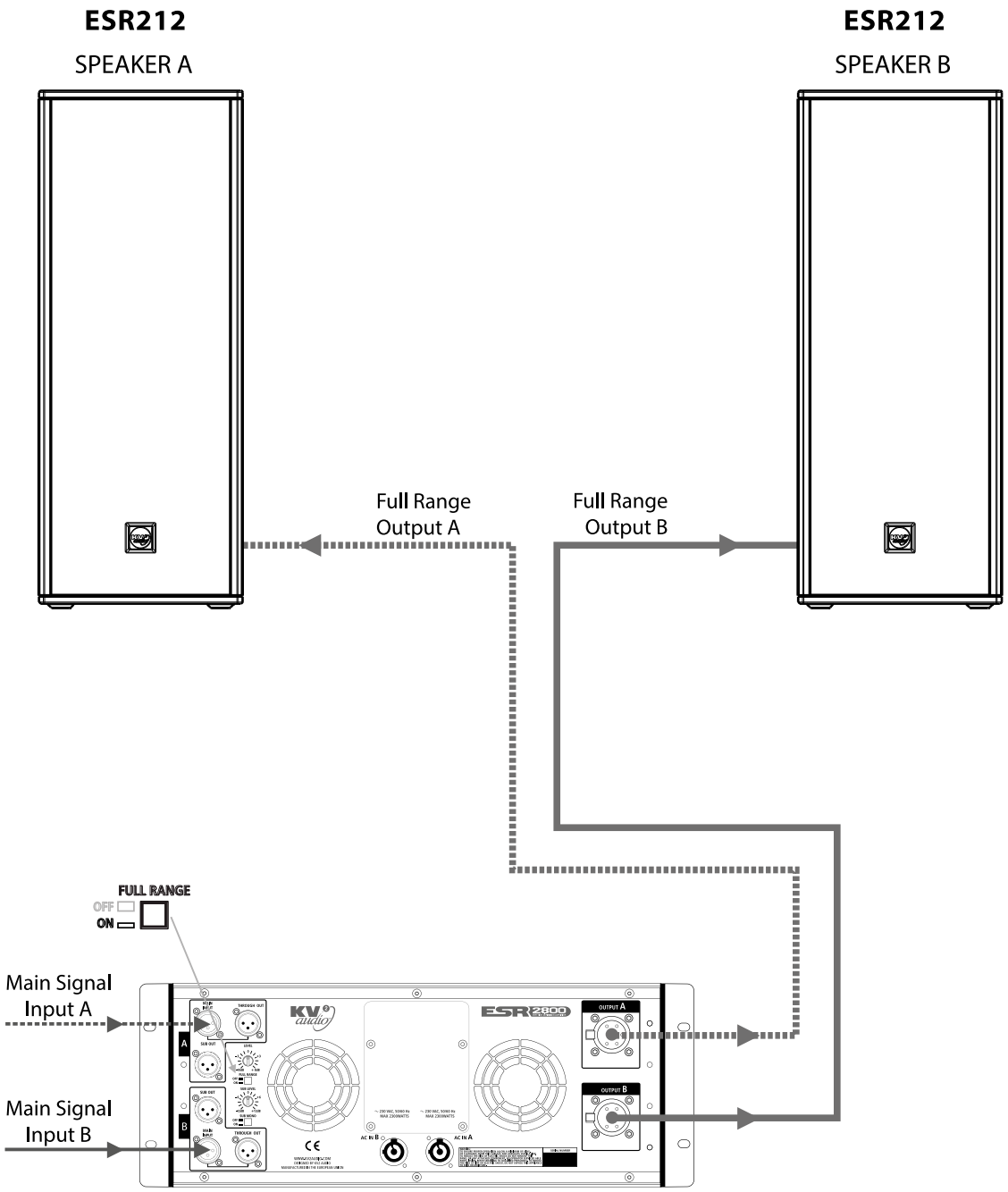

Set ESR2800 Amplifier to FULL RANGE ON mode. ESR212 cabinets plays full range signal.

External subwoofer setup

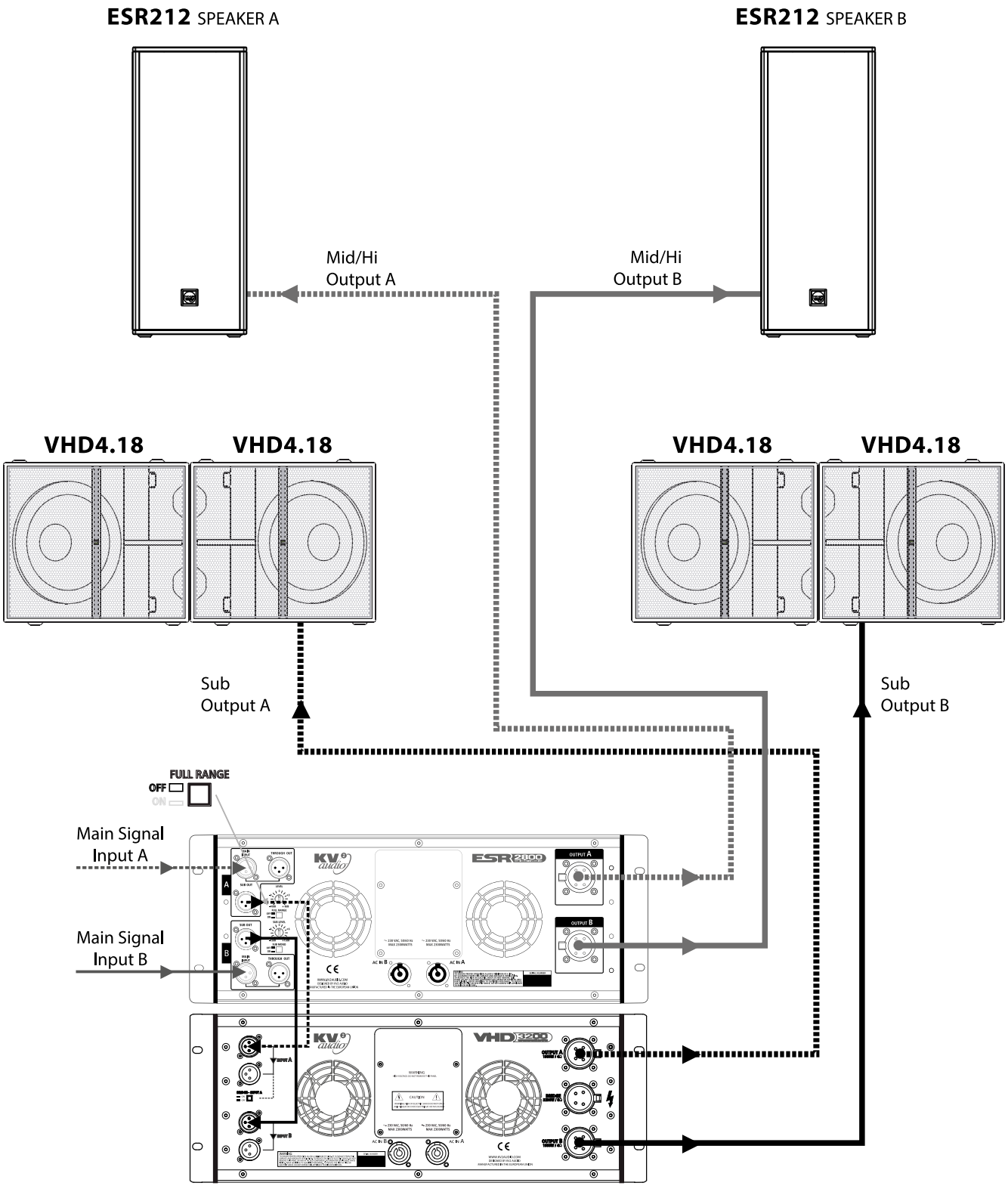

Set ESR2800 Amplifier to FULL RANGE OFF mode. Signal is crossed over at Hi/Mid for ESR212 cabinets and SUB for external subwoofer.

SUB SET UP LEVEL setting depends on which subwoofer unit is used.

Full range setup

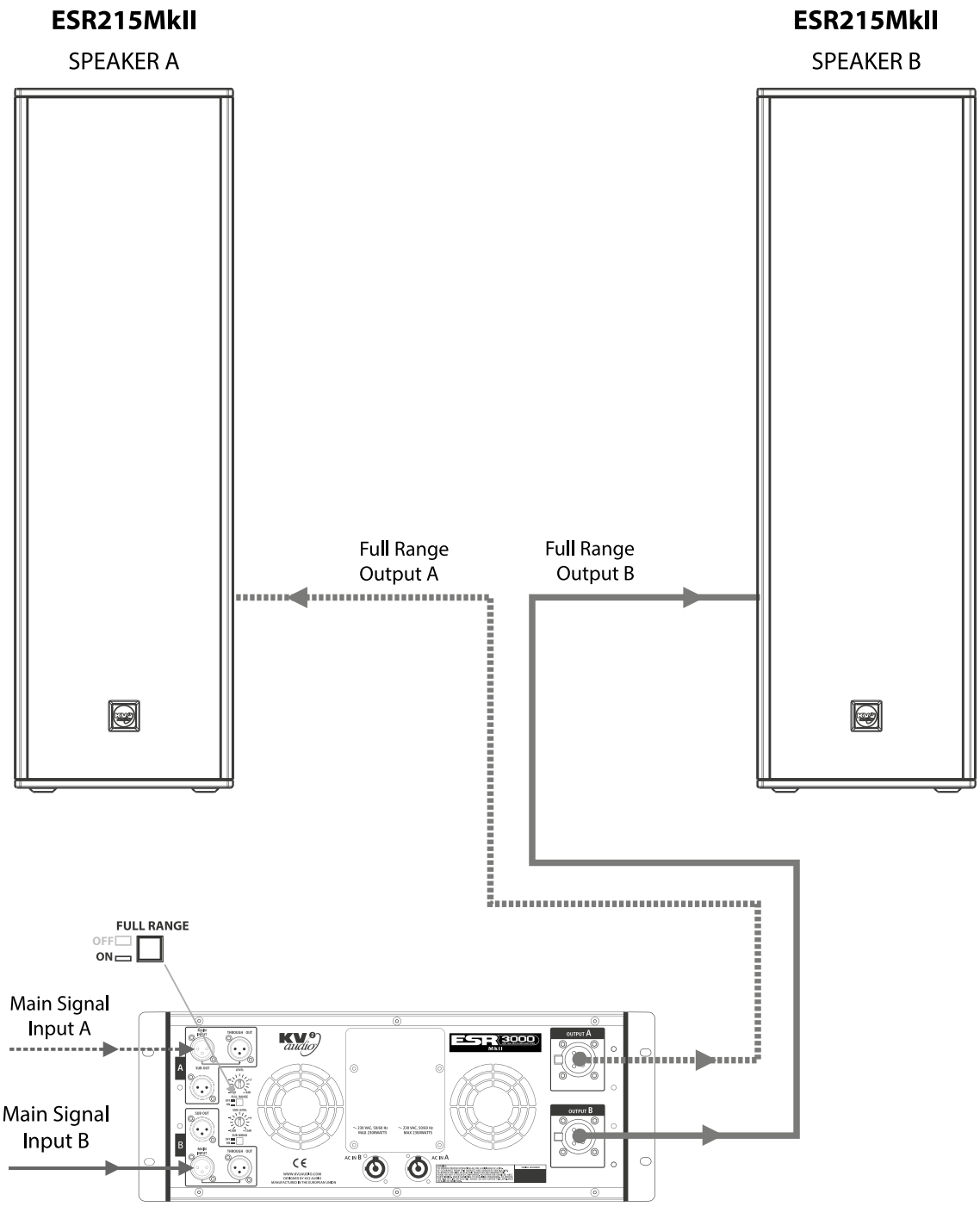

Set ESR3000MkII Amplifier to FULL RANGE ON mode. ESR215MkII cabinets plays full range signal.

External subwoofer setup

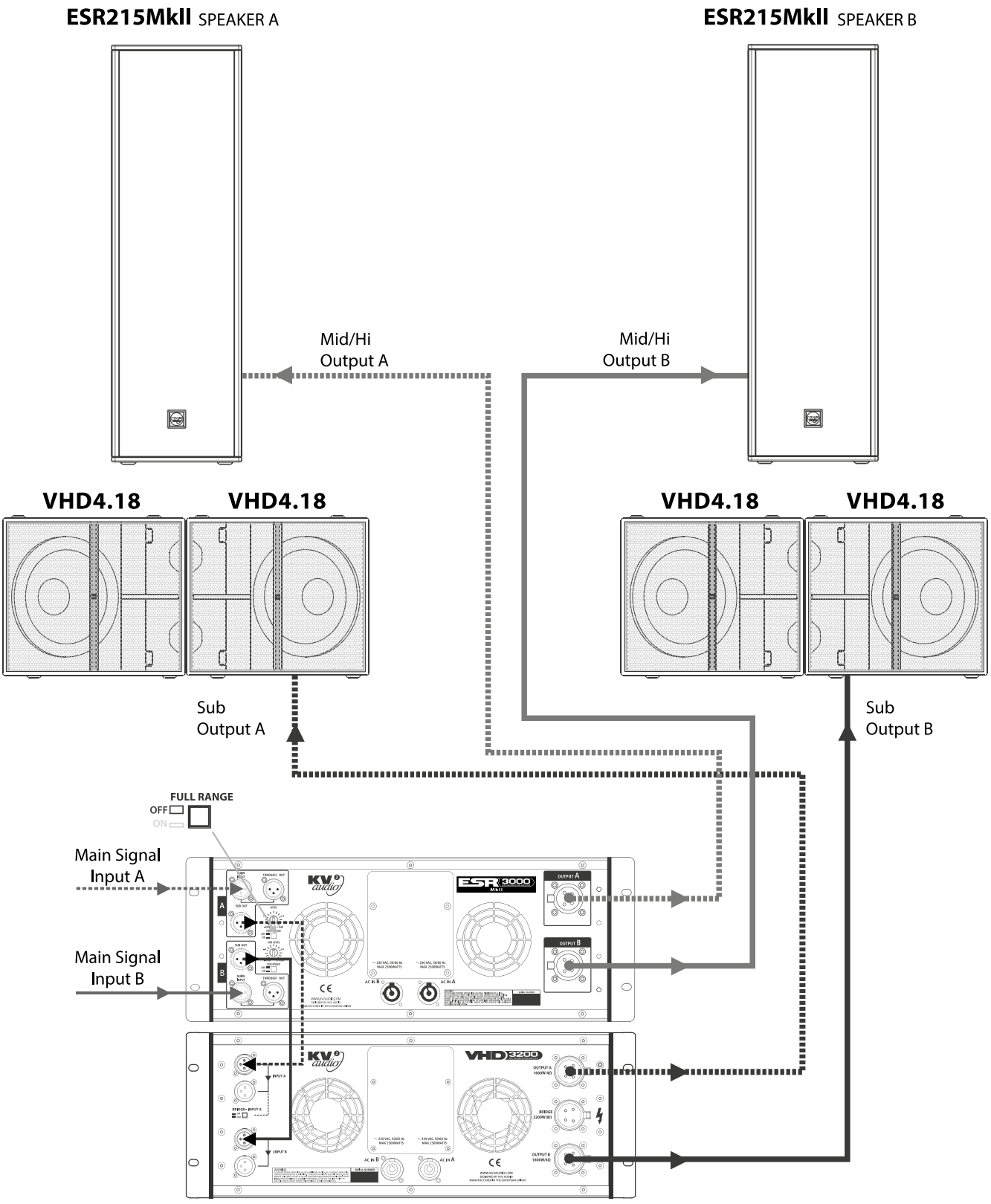

Set ESR3000MkII Amplifier to FULL RANGE OFF mode. Signal is crossed over at Hi/Mid for ESR215MkII cabinets and SUB for external subwoofer.

SUB SET UP LEVEL setting depends on which subwoofer unit is used.

Specifications

Output Channels	
Number of Channels	2 (stereo)
Total Output Power	2x 1300W

High Frequency Amplifier Specification	
Type	Class AB - Push Pull - Low IM Design, Transformer balanced output
Rated Continuous Power	100W
Distortion	<0.02%
Operating Bandwidth	2.5kHz to 40kHz

Mid Frequency Amplifier Specification	
Type	Class AB - Push Pull - Low IM Design, Transformer balanced output
Rated Continuous Power	200W
Distortion	<0.02%
Operating Bandwidth	500Hz to 2,5kHz

Low Frequency Amplifier Specification	
Type	High efficiency, Current-Enhancing, Switched-Rail Amplifier
Rated Continuous Power	1000W
Distortion	<0.02%
Operating Bandwidth	20Hz to 500Hz

Signal Input	
Input Sensitivity	1.55V RMS
Input Impedance	20kΩ (balanced)

Speaker Output	
Speaker Output	2x AP6

Power	
Power Connector	2x Neutrik PowerCon®
Operating Voltage	115V / 230V / 250V
Operating Voltage Range	100 to 120V@60Hz | 205 to 240V@50Hz | 225 to 260V@50Hz
Recommended Amperage	2x10A 115V | 2x5A 230V | 2x5A 250V

Physical Dimensions	
Height	177 mm (6.97"), 4RU
Width	481.4 mm (18.95")
Depth	455.3 mm (17.93")
Weight	36 kg (79.37lbs)

Specifications

Output Channels	
Number of Channels	2 (stereo)
Total Output Power	2x 1300W

High Frequency Amplifier Specification	
Type	Class AB - Push Pull - Low IM Design, Transformer balanced output
Rated Continuous Power	100W
Distortion	<0.02%
Operating Bandwidth	2.5kHz to 40kHz

Mid Frequency Amplifier Specification	
Type	Class AB - Push Pull - Low IM Design, Transformer balanced output
Rated Continuous Power	200W
Distortion	<0.02%
Operating Bandwidth	400Hz to 2,5kHz

Low Frequency Amplifier Specification	
Type	High efficiency, Current-Enhancing, Switched-Rail Amplifier
Rated Continuous Power	1000W
Distortion	<0.02%
Operating Bandwidth	20Hz to 400Hz

Signal Input	
Input Sensitivity	2.2V RMS
Input Impedance	20kΩ (balanced)

Speaker Output	
Speaker Output	2x AP6 female

Power	
Power Connector	2x Neutrik PowerCon®
Operating Voltage	115V / 230V / 250V
Operating Voltage Range	100 to 120V@60Hz | 205 to 240V@50Hz | 225 to 260V@50Hz
Recommended Amperage	2x10A 115V | 2x5A 230V | 2x5A 250V

Physical Dimensions	
Height	177 mm (6.97"), 4RU
Width	481.4 mm (18.95")
Depth	455.3 mm (17.93")
Weight	39 kg (86lbs)

ESR2800 Block Diagram

Channel A, channel B is identical

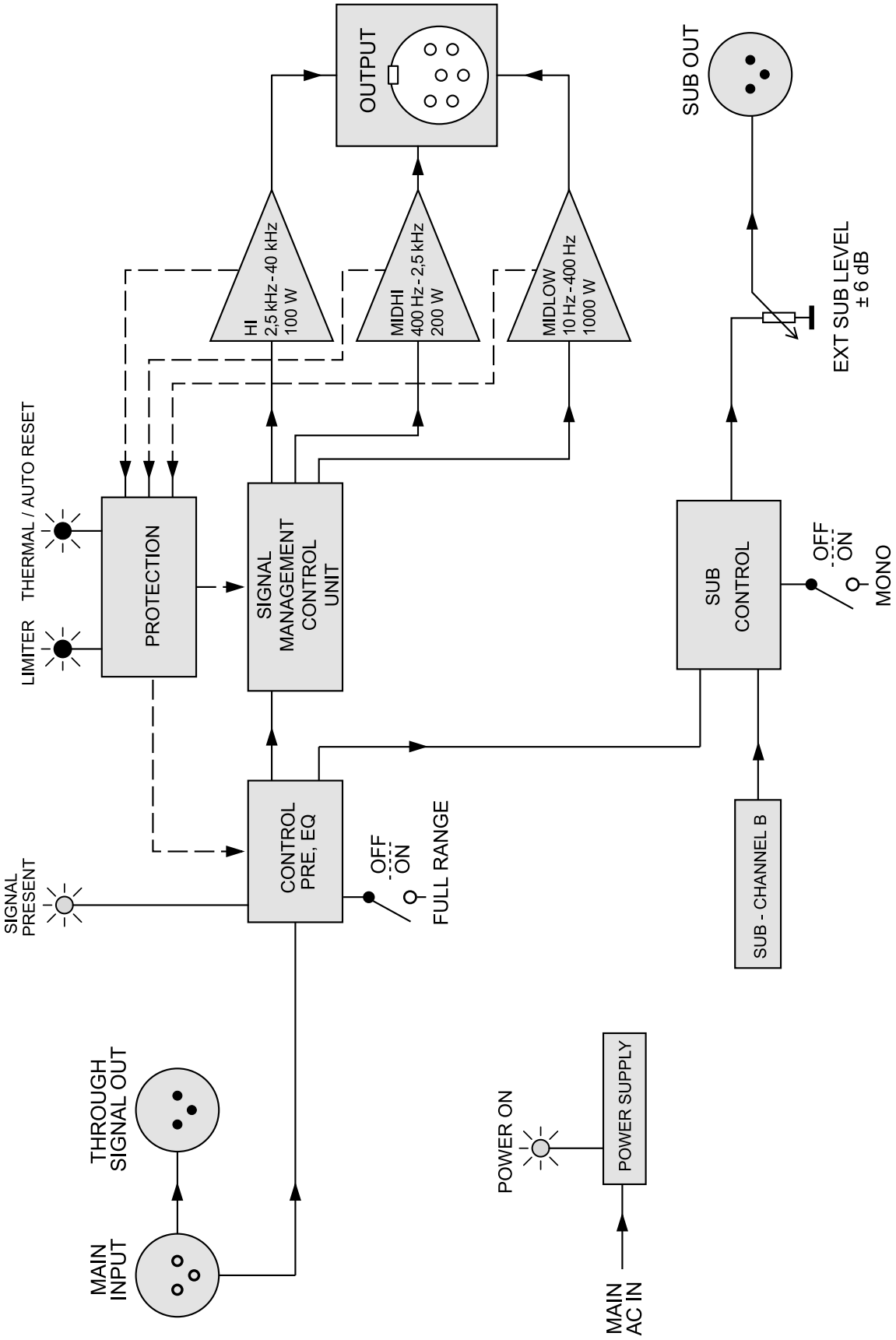

ESR3000MkII Block Diagram

Channel A, channel B is identical

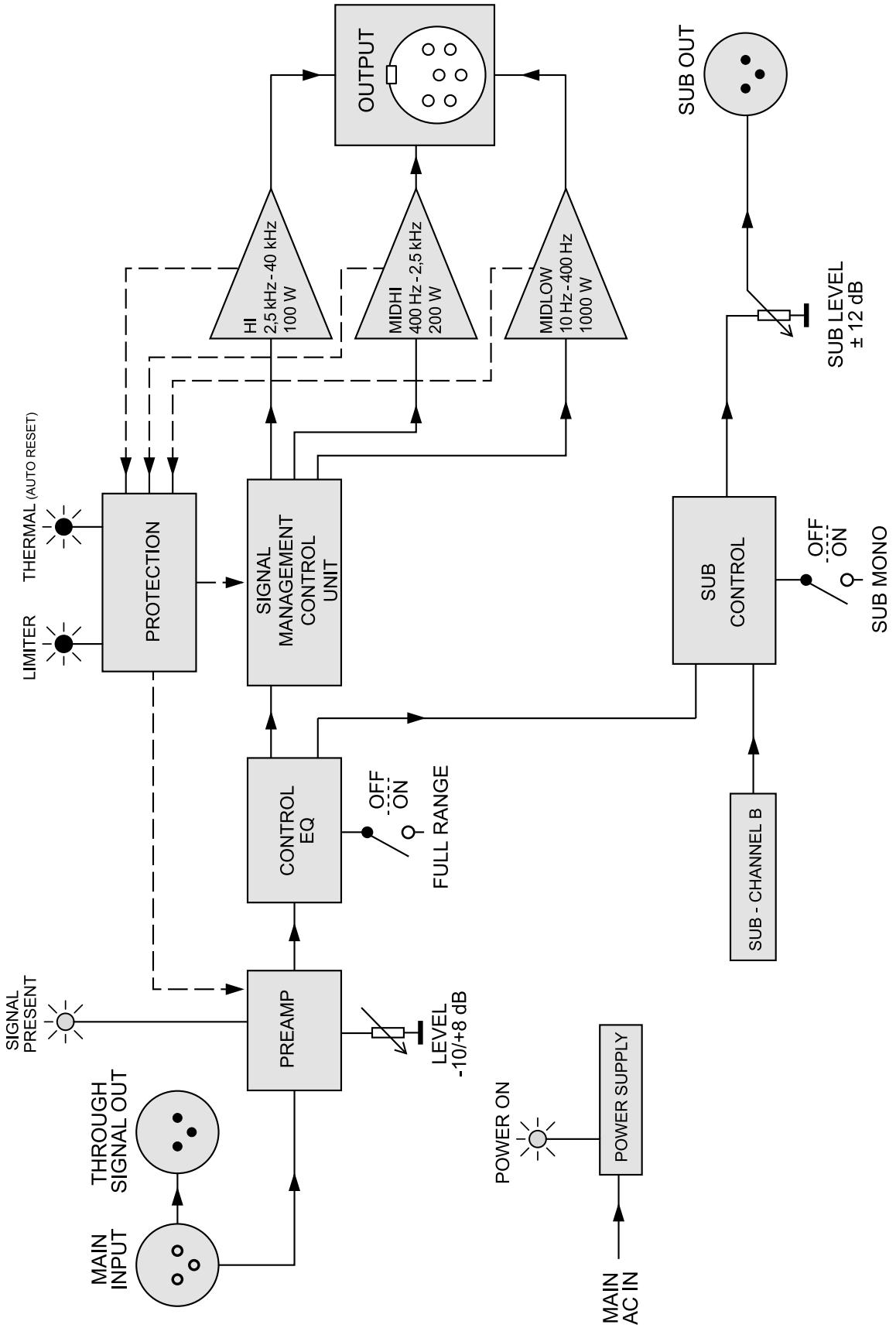

Drawing

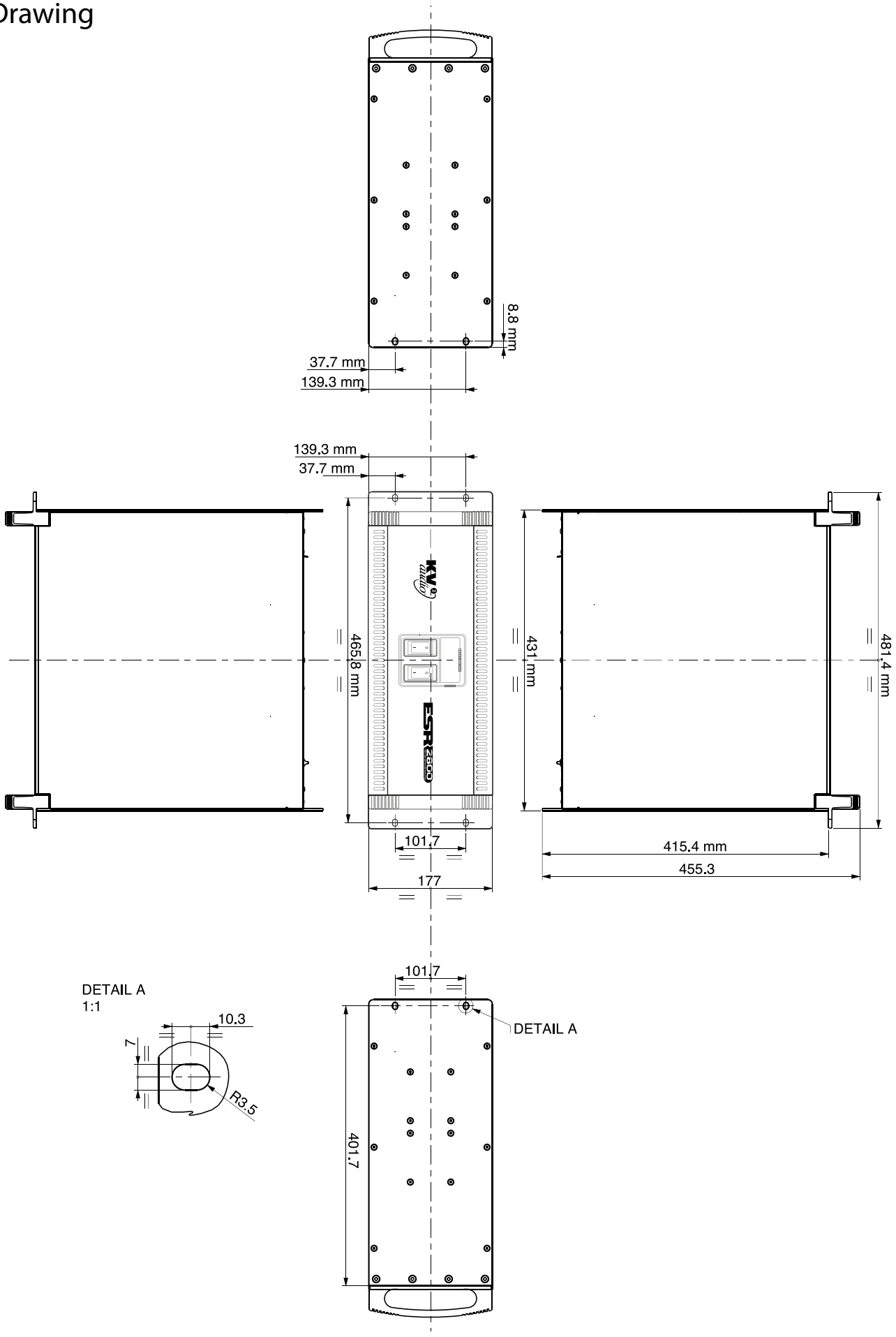
8.8 mm
37.7 mm
139.3 mm
139.3 mm
37.7 mm
465.8 mm
431 mm
481.4 mm
101.7
177
415.4 mm
455.3
DETAIL A
1:1
10.3
7
R3.5
101.7
DETAIL A
401.7

Drawing

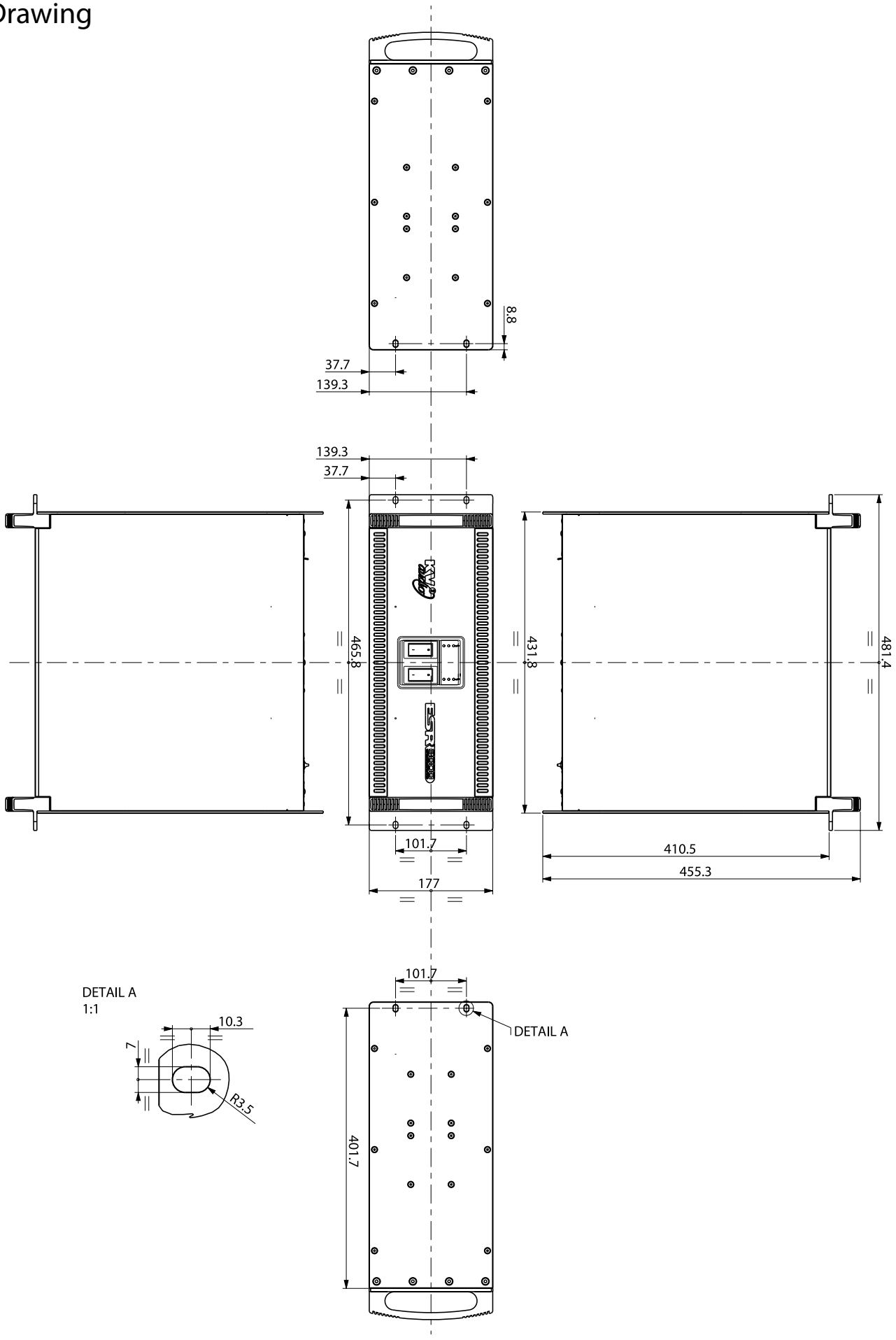
8.8
37.7
139.3
139.3
37.7
465.8
431.8
481.4
101.7
177
410.5
455.3
101.7
DETAIL A
1:1
10.3
7
R3.5
DETAIL A
401.7

ESR212

ESR212 - part number KVV 987 247

FULL RANGE MODULE
The Ultimate, Full Range, Large Scale System



Application

Specifically designed for theatres

- Very high quality fixed installations
- Live music and multimedia applications
- Classical music amplification and reproduction
- Audiophile, very high quality system
- High quality studio monitoring

Introduction

The ESR212 is a full-range 3-way loudspeaker system designed for use with the ESR2800 tri-amplified stereo electronic control pack. The ESR212 loudspeaker system features state of the art transducer design. Comprising of two 12" woofers, a 6" midrange driver and a 1" compression driver, the ESR212 delivers full range high definition audio over large spaces. It has a dispersion of 90 degrees by 60 degrees and can be installed either vertically or horizontally. The ESR212 has multiple M10 fly points as well as custom designed flyware and brackets..

Features

- The ESR212 is a full-range 3-way loudspeaker system
- Designed for use with its associated ESR2800 tri-amplified stereo electronic control pack
- The ESR loudspeaker system features Super Analog components throughout and state of the art transducer designs
- Comprising of two 12" woofers, a 6" midrange driver and a 1" compression driver the ESR212 manages to transfer the atmosphere from a performer on stage to each and every audience member
- The ESR family offers a true musical solution to the enjoyment of classical music, theatre or live performance on a grand scale

ESR Full Range Sound System Benefits

Total flexibility

ESR Series does not require a large number of speakers. Provides a full range, very high quality sound from single, small, location. For extended bass use from a wide range of subwoofers. Subwoofers can be placed in a large place range, because of 70Hz crossover point between ESR module and subwoofer.

Superb sound

Greater dynamic range than any current active design. Features Very High Denition technology with Super Analog amplifier.

Easy set-up

Plug-and-play connection to ESR2800 amp/processor module. Cabinet features top handles, seven suspension points and "integral feet" for easy positioning on stage.

Technology

The ESR212 is a 3-way high output, active-driven, full range Loudspeaker module. It is designed as part of a sound reinforcement speaker system that includes the ESR2800 system control and amplification system. The ESR212 Loudspeaker system benefits from being designed exclusively to operate above 40 Hz. By optimizing the ideal operating band pass of each system component, the ESR212 can achieve extremely high output levels consistently and safely.

Active-driven by the ESR2800 unit

Power, electronic crossovers, phase alignment, equalization, time correction and speaker protection are provided within the ESR2800 unit. This "one plug in, one-plug-out" system ensures fast, easy set up and complete control. It gives you the benefits of active sound reinforcement technology, yet locates the electronics in an easy-access rackmount module. Together, the ESR212 and ESR2800 unit deliver the highest dynamic range of any system currently available, providing new levels of clarity, depth and resolution.

Advanced compression driver

KV2 Audio's transducer partner, 18 Sound in Cavriago, Italy, manufactures and co-develops all ESR212 components. The compression driver is a 1.75-inch nitride-titanium diaphragm design, featuring a complex geometry phase plug that dramatically lowers distortion, eliminates ring modes and provides clearer, ripple free performance.

Exclusive KV2 rotatable horn design for maximum flexibility

The ESR212 features a mid/high integrated horn design with a number of unique features. First, the horn can be rotated 90°, allowing for complete flexibility in selection of vertical, horizontal system set up. The horn design is based on constant-directivity geometry with an emphasis on maintaining low transducer compression ratios, high output and wide dispersion (90° x 60°). The midrange speaker is fixed to a large aluminum heat sink which is attached to a precisely designed midrange "chamber". The combination provides optimal cone loading and heat dissipation. Further loading and dispersion is controlled through a 2.28" (58mm) precision phase plug.

Heat-resistant midrange

Midrange frequencies between 500Hz and 2.5kHz are reproduced by a six-inch midrange speaker that provides 106 dB of sensitivity (1 watt / 1 meter) when coupled with the integrated horn. The magnetic motor assembly features a high temperature 1.75" (44mm) diameter voice coil assembly and extensive use of neodymium. Because of the limited linear movement of most midrange transducers - usually 2-3mm - ventilation of the voice coil assembly and magnetic structure is poor and failure rate from heat fatigue is high. The ESR212 midrange dissipates heat passively through the use of a massive aluminum heat sink. When combined with the ESR2800 unit control electronics, the system provides high output levels safely and consistently over infinite periods of time and dramatically reducing heat associated transducer problems such as power compression and decreased dynamics.

Neodymium bass transducer

The ESR212 features a twelve-inch neodymium bass speaker with front loaded bass reflex design. It is important to note that neodymium is not a transducer panacea, as it cannot safely operate at the same typical operating temperatures ferrite does. Using neodymium requires a profound understanding of material science and finite element analysis to properly design a stable, high force magnetic structure that functions correctly. 18 Sound and KV2 audio engineering jointly designed the twelve-inch mid bass driver for the ESR212. The ESR212 bass transducer reproduces frequencies from 38Hz to 500Hz. The bass transducer is very precise and fast with high sensitivity. The high efficiency neodymium motor provides an extraordinary amount of force that delivers complete control of the cone mass and a high overall weight loss.

Easy to set up

The ESR212 is an aesthetically pleasing - looking enclosure featuring a number of ergonomically designed components that make it a light, small, and easy speaker to set up and use. ESR212 features the two top handles for pick up and reposition. There are six industrial grade, internal braces placed at each corner and one internal brace on the back. Corner braces are held in places by two M10 bolts, the back brace is held by two M6 and one M10, providing a wide range of installation and suspension flexibility.



ESR212 rear panel
Cable connection to ESR2800 unit Amplifier/Controller

Specifications

System Acoustic Perfomance	
Max SPL Long-term	129dB
Max SPL Peak	135dB
-3dB Response	38Hz to 22kHz
-10dB Response	33Hz to 28kHz
Crossover Point	500Hz, 2.5kHz
High Frequency Section	
Acoustic Design	Horn Loaded
High Horn Coverage Horizontal / Vertical	90° x 60°
Rotatable Horn	YES
High Frequency Amplifier Requirement	100W from ESR2800 Amplifier
Throat Exit Diameter / Diaphragm Size	1" / 1.75"
Diaphragm Material	NVPD Treated Titanium
Magnet Type	Neodymium
Mid Range Section	
Acoustic Design	Horn Loaded
Mid Horn Coverage Horizontal / Vertical	90° x 60°
Rotatable Horn	YES
Midrange Amplifier Requirement	200W from ESR2800 Amplifier
Woofer Size / Voice Coil Diameter	6" / 1.75"
Diaphragm Material	Epoxy Reinforced Cellulose
Magnet Type	Neodymium
Low Frequency Section	
Acoustic Design	Front Loaded, Bass Reflex
Subwoofer Amplifier Requirement	1000W from ESR2800 Amplifier
Number of Drivers	2
Woofer Size / Voice Coil Diameter / Design	12" / 3" / Inside Outside
Diaphragm Material	Epoxy Reinforced Cellulose
Magnet Type	Neodymium
Speaker Input	
Speaker Input	Amphenol AP-6 male
Speaker Output	
Speaker Output	-
Cabinet	
Cabinet Material	Baltic birch
Handles	2
Color	Black / Optional luxury High gloss
Physical Dimensions	
Height	1135 mm (44.69")
Width	447 mm (17.6")
Depth	444 mm (17.48")
Weight	45 kg (99.2lbs)

Frequency response

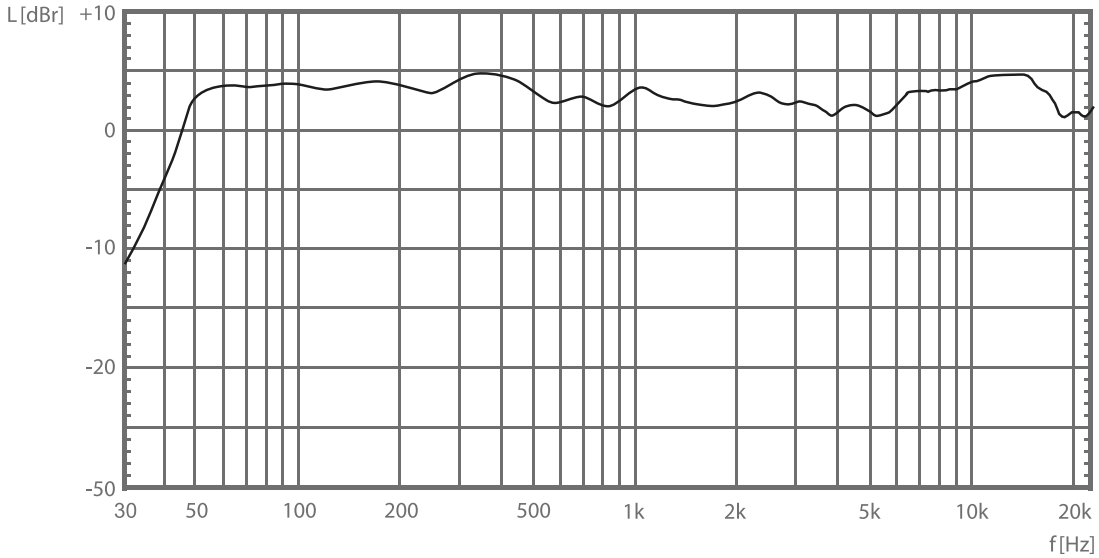

Horizontal Polarplots

73Hz - 250Hz

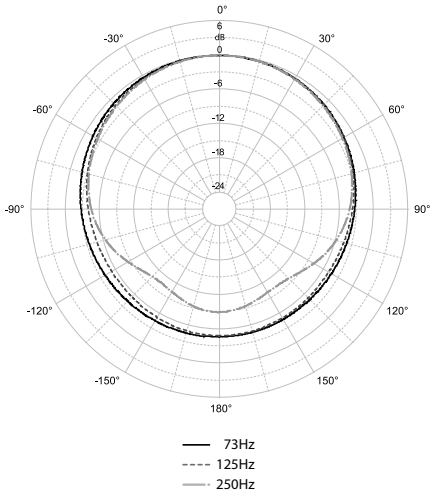

500Hz - 2kHz

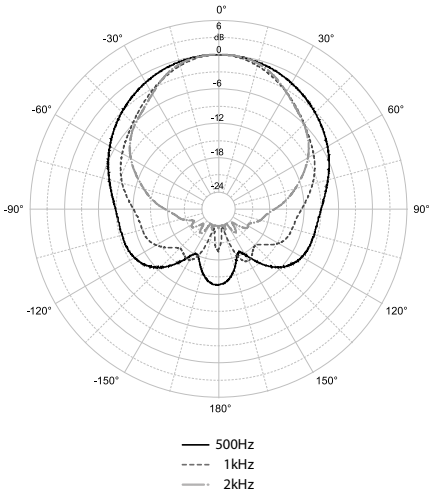

4kHz - 16kHz

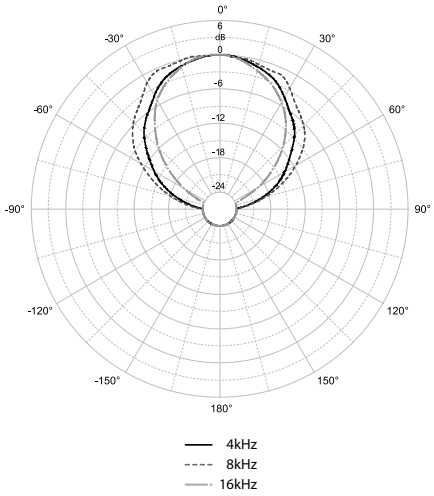

Vertical Polarplots

73Hz - 250Hz

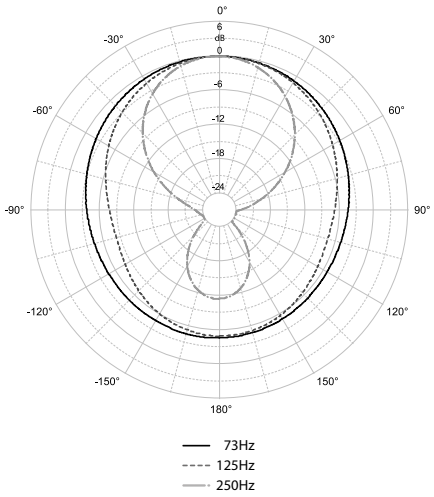

500Hz - 2kHz

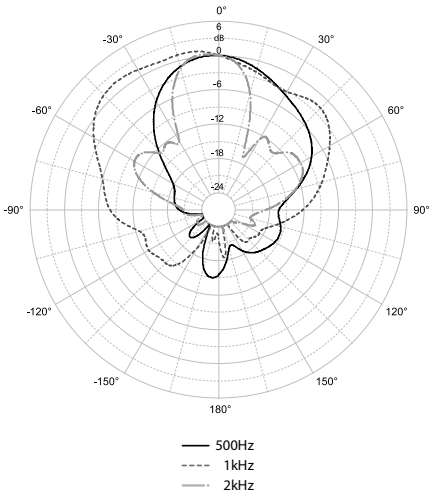

4kHz - 16kHz

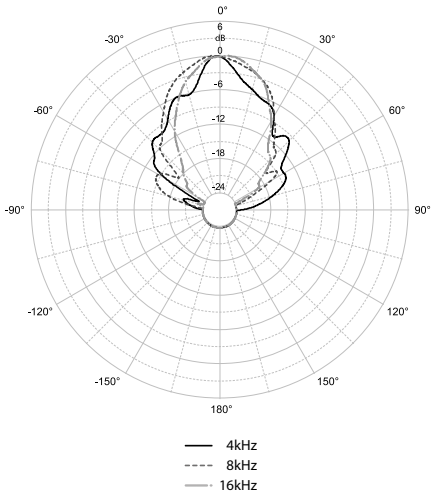

Drawing

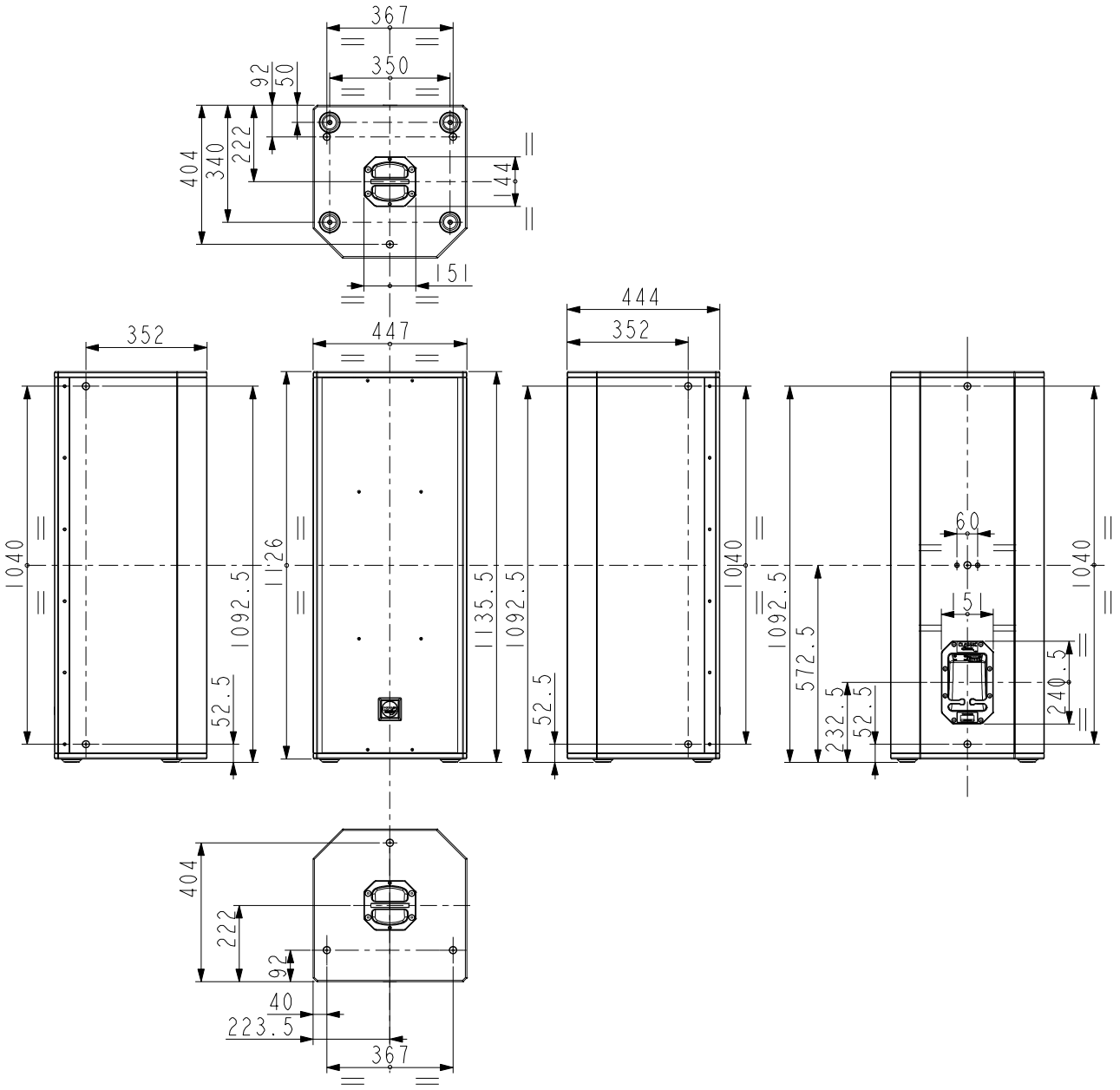

ESR212 Architects and Engineer's Specifications

The three-way, mid / high loudspeaker system shall incorporate two 12-inch mid-bass (MB) transducer a 6-inch mid range (MR) speaker and a 1-inch exit compression driver high frequency (HF) transducer. The LF drivers shall be mounted above and below mid / hi horn tuned for optimum mid-bass response and dispersion. The HF and MR transducers shall be loaded on a rotatable, integrated, constant directivity mid/high horn assembly.

The system has a nominal coverage pattern of 90° (horizontal) x 60° (vertical). The loudspeaker enclosure shall have a rectangular shape and shall incorporate, two top handles. Enclosure incorporates M10 suspension points, three M10 suspension points on the top, three M10 on the bottom and one M10 suspension point on the back. The speaker cabinet shall be finished with an ultra wear resistant black polymer coating and fitted with a weather resistant perforated steel grill. The system shall receive power from a separate ESR2800 Amplifer. ESR2800 Amplifier - Controller module consisting of separate power amplifiers for high, midrange and midbass transducers as well as signal processing including electronic band pass crossover filters, phase alignment, time correction, equalization and speaker protection. The speaker system shall connect to the Amplifier/Controller Module via proprietary cables terminated in Amphenol AP-6 connectors. The three-way mid / high loudspeaker system shall be the KV2 Audio ESR212.

ESR215MkII - part number KVV 987 245

FULL RANGE MODULE

The Ultimate, Full Range, Large Scale System



Application

Intentionally designed for use in Theatres and Cultural Centers to provide the highest audio quality from single Column enclosures for stage sides and prosceniums for medium to larger venues

- Fixed Installations
- Music venues
- Classical and opera concerts

Introduction

The ESR215MkII is a large scale full-range 3-way loudspeaker system with a wide horizontal dispersion of 110 degrees. Designed for use with the ESR3000MkII tri-amplified stereo electronic control pack, the ESR215MkII loudspeaker system features two 15" woofers, an 8" mid-range driver and the same large scale NPVD 3" compression driver found in KV2 Audio's VHD mid-hi enclosures. With a wide and smooth frequency response the ESR215MkII is ideal for theatre or stadium applications. Like the ESR212, it incorporates multiple M10 fly points and various brackets and flyware are also available.

Features

- High-output, full-range 3-way loudspeaker system
- 132dB sustained output
- Wide dispersion at high frequencies, controlled at lowmids to reduce indoor reflections
- Mid/High horn design provides optimized transducer loading and controlled dispersion
- Patent-Pending 3" diaphragm nitride-titanium compression driver with complex geometry phase plug and neodymium magnetic motor structure for higher output and lower distortion performance
- Eight-inch midrange Transcoil driver with 3" (76 mm) neodymium magnetic motor structure for increased control and output and decreased distortion and weight
- Proprietary midrange heat dissipation system controls voice coil temperature, ensures high dynamics and extends transducer lifespans
- Front-loaded, 15-inch mid-bass driver with 3.00" (76 mm) voice coil assembly and ferrite magnetic motor structure
- Professional, exterior-grade Baltic birch construction with wear-resistant polymer coating Proprietary corner and side handle designs for simplified handling and carrying
- Acetal copolymer high impact, low friction feet allowing other cabinets lock-in and easy cabinet movement
- Six internal corner and one back brace with M10 suspension points and side and top and bottom handles with M10 suspension points. A total of 17 suspension points are available for custom installation applications
- Requires ESR3000MkII unit for control electronics and amplification

ESR Full Range Sound System Benefits

Total flexibility

ESR Series does not require a large number of speakers. Provides a full range, very high quality sound from single, small, location. For extended bass use from a wide range of subwoofers. Subwoofers can be placed in a large place range, because of the 70Hz crossover point between ESR module and subwoofer.

Superb sound

Greater dynamic range than any current active design. Features Very High Definition technology with Super Analog amplifier.

Easy set-up

Plug-and-play connection to ESR3000MkII amp/processor module. Cabinet features top handles, seven suspension points and "integral feet" for easy positioning on stage.

Technology

The ESR215MkII is a 3-way high output, active-driven, full range Loudspeaker module. It is designed as part of a sound reinforcement speaker system that includes the ESR3000MkII system control and amplification system.
The ESR215MkII Loudspeaker system benefits from being designed exclusively to operate above 35Hz. By optimizing the ideal operating band pass of each system component, the ESR215MkII can achieve extremely high output levels consistently and safely.

Active-driven by the ESR3000MkII unit

Power, electronic crossovers, phase alignment, equalization, time correction and speaker protection are provided within the ESR3000MkII unit. This "one plug in, one-plug-out" system ensures fast, easy set up and complete control. It gives you the benefits of active sound reinforcement technology, yet locates the electronics in an easy-access rackmount module.
Together, the ESR215MkII and ESR3000MkII unit deliver the highest dynamic range of any system currently available, providing new levels of clarity, depth and resolution.

Advanced compression driver

KV2 Audio's transducer partner, 18 Sound in Cavriago, Italy, manufactures and co-develops all ESR215MkII components.
The compression driver is a 3-inch nitride-titanium diaphragm design, featuring a complex geometry phase plug that dramatically lowers distortion, eliminates ring modes and provides clearer, ripple free performance.

Wide dispersion horn

The ESR215MkII features a mid/high integrated horn design with a number of unique features. The horn design is based on constant directivity geometry with an emphasis on maintaining low transducer compression ratios, high output and wide dispersion (110˚ x 40˚). The midrange speaker with precisely designed heat sink midrange "chamber". The combination provides optimal cone loading and heat dissipation. Further loading and dispersion is controlled through A precision phase plug.

Heat-resistant midrange

Midrange frequencies between 400Hz and 2.5kHz are reproduced by eight-inch midrange speaker that provides 108dB of sensitivity (1 watt / 1 meter) when coupled with the integrated horn. The magnetic motor assembly features a high temperature 3" (76 mm) diameter voice coil assembly and extensive use of neodymium. Because of the limited linear movement of most midrange transducers - usually 2-3 mm - ventilation of the voice coil assembly and magnetic structure is poor and failure rate from heat fatigue is high. The ESR215MkII midrange dissipates heat passively through the use of a massive heat sink midrange chamber. When combined with the ESR3000MkII unit control electronics, the system provides high output levels safely and consistently over infinite periods of time and dramatically reducing heat associated transducer problems such as power compression and decreased dynamics.

Neodymium bass transducer

The ESR215MkII features a fifteen-inch ferrite bass speaker with front loaded bass reflex design. Great advantage of the ferrite structure is long-term stability of parametres and relative resistances to high temperatures.
The ESR215MkII bass transducer reproduces frequencies from 35Hz to 500Hz. The bass transducer is very precise and fast with high sensitivity. The high efficiency ferrite motor provides an extraordinary amount of force that delivers complete control of the cone mass and a high overall weight loss.

Easy to set up

The ESR215MkII is an aesthetically pleasing - looking enclosure featuring a number of ergonomically designed components that make speaker easy to set up and use.
ESR215MkII features the two top handles for pick up and reposition with additional M10 suspensions point. There are six industrial grade, internal braces placed at each corner and one internal brace on the back. Corner braces are held in places by two M10 bolts, the back brace is held by two M6 and one M10, providing a wide range of installation and suspension flexibility.



ESR215MkII rear panel
Cable connection to ESR2800/3000MkII unit
Amplifier/Controller

Specifications

System Acoustic Perfomance	
Max SPL Long-term	132dB
Max SPL Peak	138dB
-3dB Response	35Hz to 22kHz
-10dB Response	28Hz to 30kHz
Crossover Point	400Hz, 2.5kHz
High Frequency Section	
Acoustic Design	Horn Loaded
High Horn Coverage Horizontal / Vertical	110° x 40°
Rotatable Horn	NO
High Frequency Amplifier Requirement	100W from ESR3000MkII Amplifier
Throat Exit Diameter / Diaphragm Size	1.4" / 3"
Diaphragm Material	Nitride Titanium
Magnet Type	Neodymium
Mid Range Section	
Acoustic Design	Horn Loaded
Mid Horn Coverage Horizontal / Vertical	110° x 40°
Rotatable Horn	NO
Midrange Amplifier Requirement	200W from ESR3000MkII Amplifier
Woofer Size / Voice Coil Diameter / Design	8" / 3" / Trans Coil
Diaphragm Material	Epoxy Reinforced Cellulose
Magnet Type	Neodymium
Low Frequency Section	
Acoustic Design	Front Loaded, Bass Reflex
Subwoofer Amplifier Requirement	1000W from ESR3000MkII Amplifier
Number of Drivers	2
Woofer Size / Voice Coil Diameter / Design	15" / 3" / Inside Outside
Diaphragm Material	Epoxy Reinforced Cellulose
Magnet Type	Ferrite
Speaker Input	
Speaker Input	Amphenol AP-6 male
Speaker Output	
Speaker Output	-
Cabinet	
Cabinet Material	Baltic birch
Handles	4
Color	"Orange peeled" Matt Black or any RAL
Physical Dimensions	
Height	1515 mm (59.65")
Width	470 mm (18.50")
Depth	500 mm (19.69")
Weight	71 kg (156.53lbs)

Frequency response

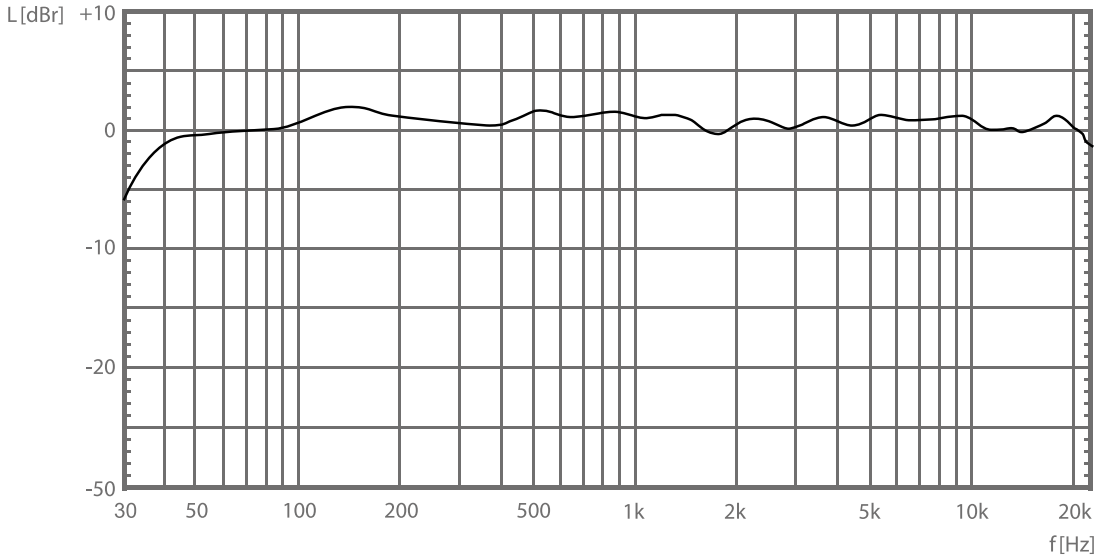

Horizontal Polarplots

73Hz - 250Hz

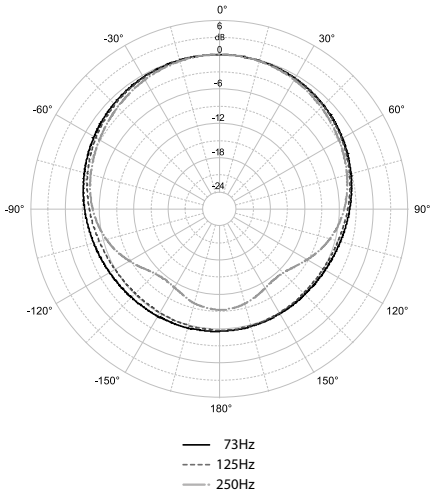

500Hz - 2kHz

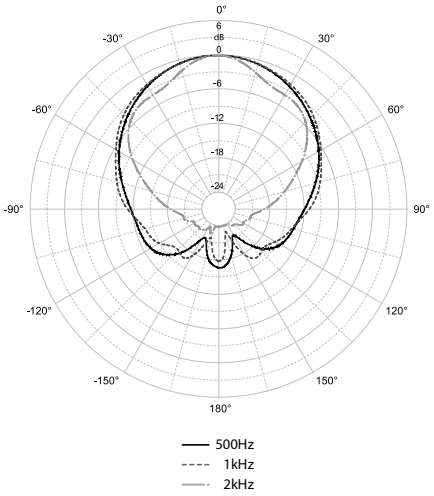

4kHz - 16kHz

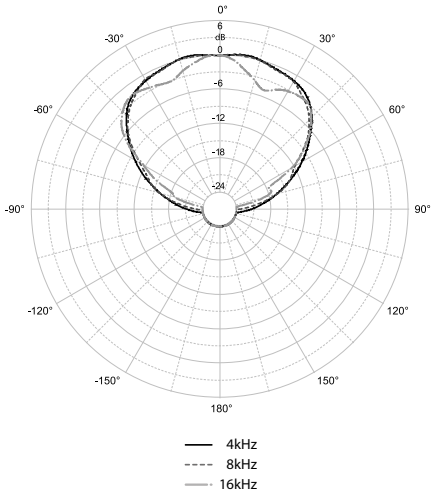

Vertical Polarplots

73Hz - 250Hz

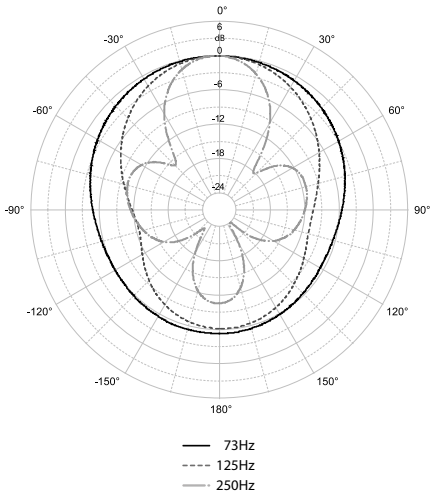

500Hz - 2kHz

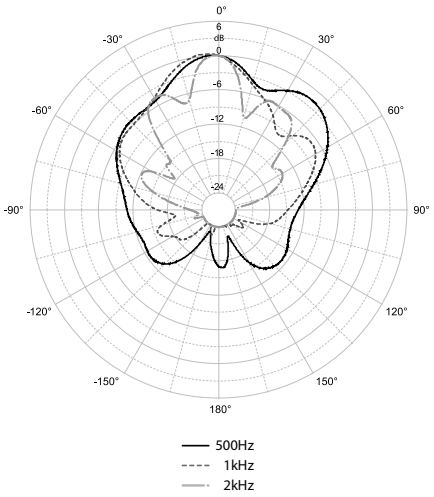

4kHz - 16kHz

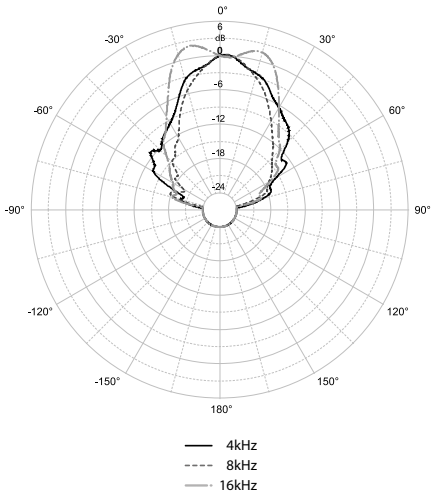

Drawing

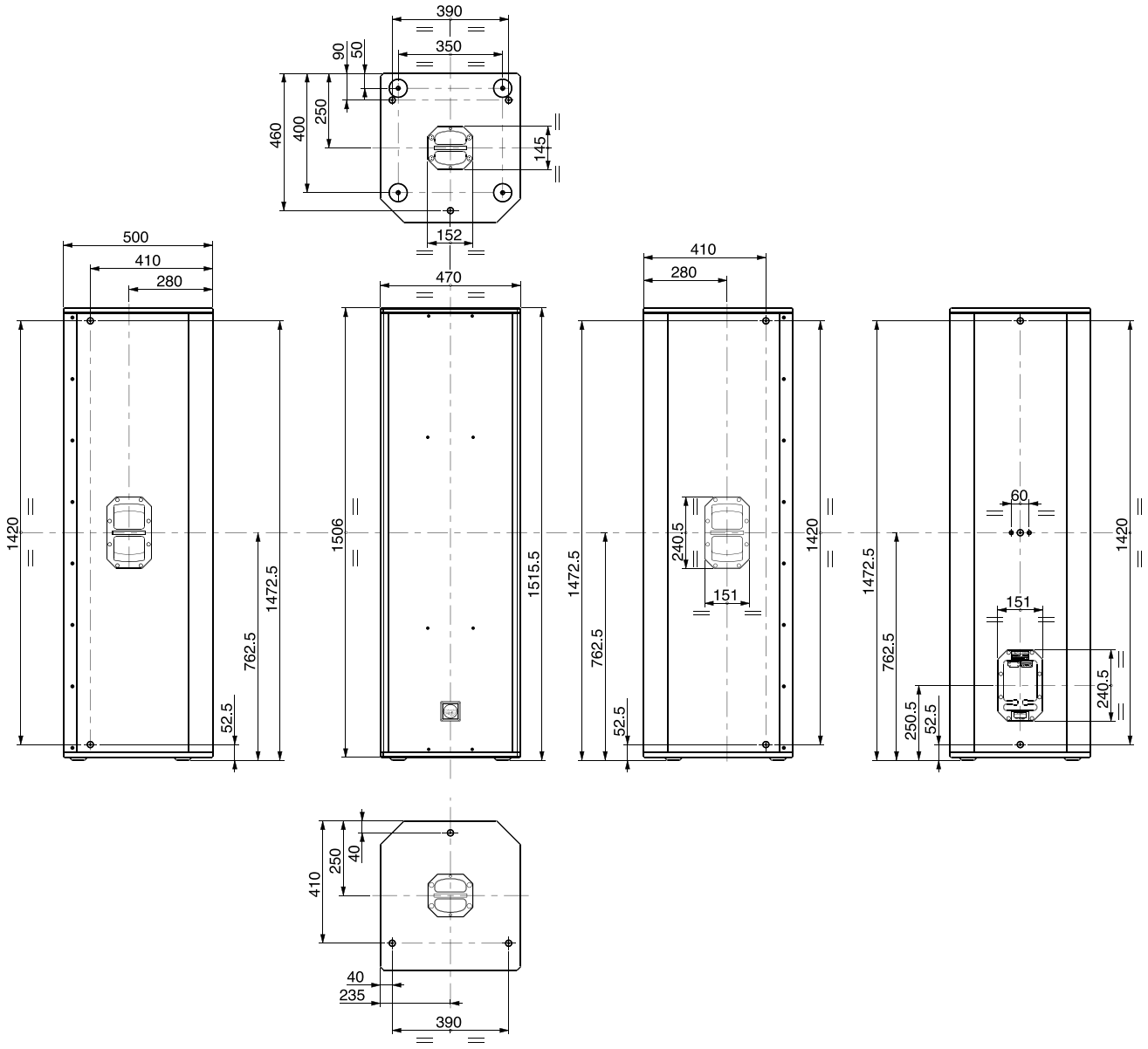

ESR215MkII Architects and Engineer's Specifications

The three-way, mid / high loudspeaker system shall incorporate two 15-inch mid-bass (MB) transducer a 8-inch mid range (MR) speaker and a 1.4-inch exit compression driver high frequency (HF) transducer. The LF drivers shall be mounted above and below mid / hi horn tuned for optimum mid-bass response and dispersion. The HF and MR transducers shall be loaded on a integrated, constant directivity, wide dispersion mid/high horn assembly. The system has a nominal coverage pattern of 110° (horizontal) x 40° (vertical). The loudspeaker enclosure shall have a rectangular shape and shall incorporate, two top handles. Enclosure incorporates M10 suspension points, three M10 suspension points on the top, one in the handles, three M10 on the bottom and one M10 suspension point on the back. The speaker cabinet shall be finished with an ultra wear resistant black polymer coating and fitted with a weather resistant perforated steel grill. The system shall receive power from a separate ESR3000MkII Amplifer.

ESR3000MkII Amplifier - Controller module consisting of separate power amplifiers for high, midrange and midbass transducers as well as signal processing including electronic band pass crossover filters, phase alignment, time correction, equalization and speaker protection. The speaker system shall connect to the Amplifier/Controller Module via proprietary cables terminated in Amphenol AP-6 connectors. The three-way mid / high loudspeaker system shall be the KV2 Audio ESR215MkII.

ESR215S - part number KVV 987 424

FULL RANGE MODULE

The Ultimate, Full Range, Large Scale System , Slim version



Application

Intentionally designed for use in Theatres and Cultural Centers to provide the highest audio quality from single Column enclosures for stage sides and prosceniums for medium to larger venues

- Fixed Installations
- Music venues
- Classical and opera concerts

Introduction

The ESR215S is a slim version of large scale full-range 3-way loudspeaker system with a wide horizontal dispersion of 110 degrees. Designed for use with the ESR3000MkII tri-amplified stereo electronic control pack, the ESR215S loudspeaker system features two 15" woofers, an 8" mid-range driver and the same large scale NPVD 3" compression driver found in KV2 Audio's VHD mid-hi enclosures. With a wide and smooth frequency response the ESR215S is ideal for theatre or stadium applications. Like the ESR212, it incorporates multiple M10 fly points and various brackets and flyware are also available.

Features

- High-output, full-range 3-way loudspeaker system
- Slim version of renowed ESR215 box
- 132dB sustained output
- Wide dispersion at high frequencies, controlled at lowmids to reduce indoor reflections
- Mid/High horn design provides optimized transducer loading and controlled dispersion
- Patent-Pending 3" diaphragm nitride-titanium compression driver with complex geometry phase plug and neodymium magnetic motor structure for higher output and lower distortion performance
- Eight-inch midrange Transcoil driver with 3" (76 mm) neodymium magnetic motor structure for increased control and output and decreased distortion and weight
- Proprietary midrange heat dissipation system controls voice coil temperature, ensures high dynamics and extends transducer lifespans
- Front-loaded, 15-inch mid-bass driver with 3.00" (76 mm) voice coil assembly and ferrite magnetic motor structure
- Professional, exterior-grade Baltic birch construction with wear-resistant polymer coating Proprietary corner and side handle designs for simplified handling and carrying
- Acetal copolymer high impact, low friction feet allowing other cabinets lock-in and easy cabinet movement
- Six internal corner and one back brace with M10 suspension points and side and top and bottom handles with M10 suspension points. A total of 17 suspension points are available for custom installation applications
- Requires ESR3000MkII unit for control electronics and amplification

Specifications

System Acoustic Perfomance	
Max SPL Long-term	132dB
Max SPL Peak	138dB
-3dB Response	37Hz to 22kHz
-10dB Response	30Hz to 30kHz
Crossover Point	400Hz, 2.5kHz
High Frequency Section	
Acoustic Design	Horn Loaded
High Horn Coverage Horizontal / Vertical	110° x 40°
Rotatable Horn	NO
High Frequency Amplifier Requirement	100W from ESR3000MkII Amplifier
Throat Exit Diameter / Diaphragm Size	1.4" / 3"
Diaphragm Material	Nitride Titanium
Magnet Type	Neodymium
Mid Range Section	
Acoustic Design	Horn Loaded
Mid Horn Coverage Horizontal / Vertical	110° x 40°
Rotatable Horn	NO
Midrange Amplifier Requirement	200W from ESR3000MkII Amplifier
Woofer Size / Voice Coil Diameter / Design	8" / 3" / Trans Coil
Diaphragm Material	Epoxy Reinforced Cellulose
Magnet Type	Neodymium
Low Frequency Section	
Acoustic Design	Front Loaded, Bass Reflex
Subwoofer Amplifier Requirement	1000W from ESR3000MkII Amplifier
Number of Drivers	2
Woofer Size / Voice Coil Diameter / Design	15" / 3" / Inside Outside
Diaphragm Material	Epoxy Reinforced Cellulose
Magnet Type	Neodymium
Speaker Input	
Speaker Input	Amphenol AP-6 male
Speaker Output	
Speaker Output	-
Cabinet	
Cabinet Material	Baltic birch
Handles	4
Color	"Orange peeled" Matt Black or any RAL
Physical Dimensions	
Height	1509 mm (59.41")
Width	450 mm (17.72")
Depth	400 mm (15.75")
Weight	69 kg (152.12lbs)

Frequency response

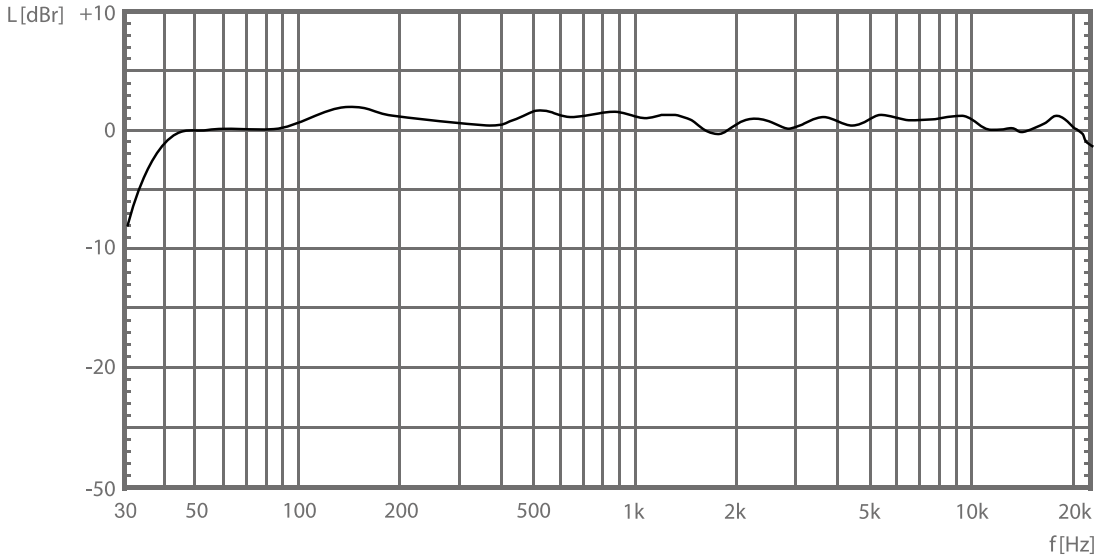

Horizontal Polarplots

73Hz - 250Hz

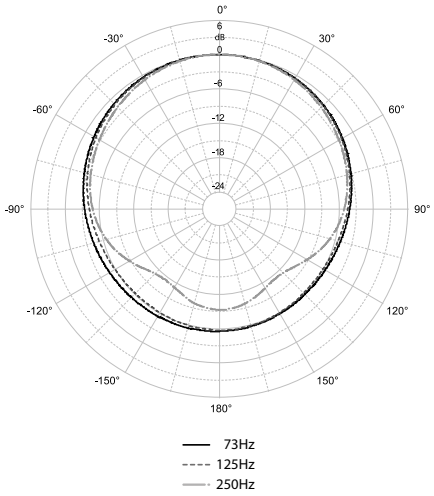

500Hz - 2kHz

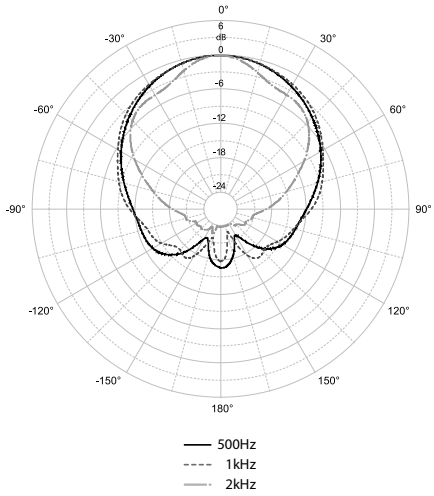

4kHz - 16kHz

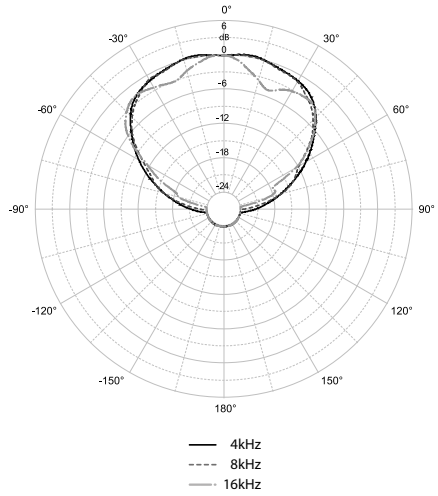

Vertical Polarplots

73Hz - 250Hz

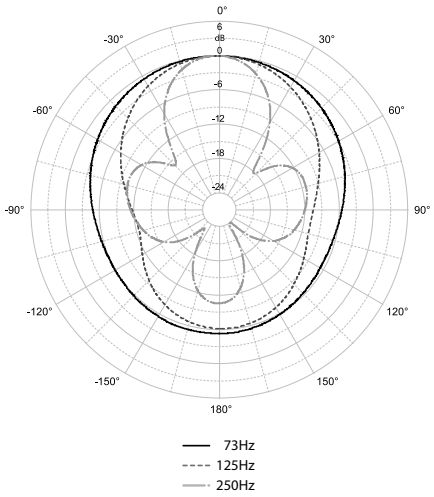

500Hz - 2kHz

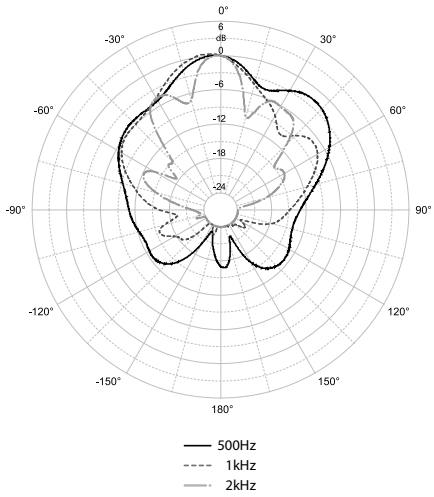

4kHz - 16kHz

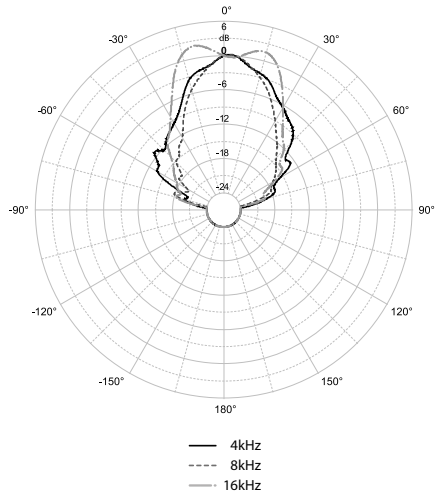

Drawing

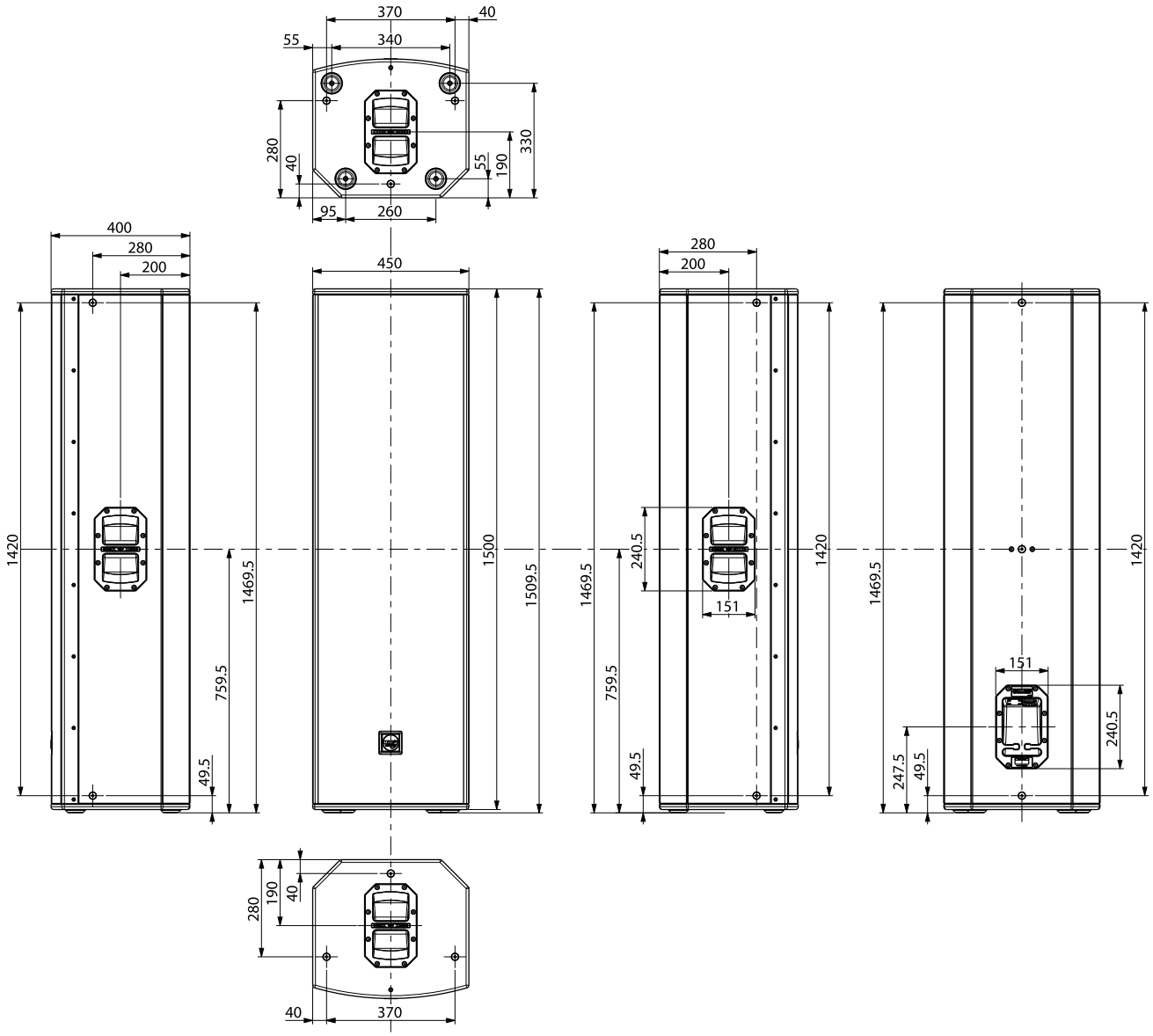

ESR215S Architects and Engineer's Specifications

The three-way full range loudspeaker system shall incorporate two 15-inch mid-bass (LF) transducers a 8-inch mid-range (MR) speaker and a 1.4-inch exit compression driver high frequency (HF) transducer. The LF drivers shall be mounted above and below the mid-hi horn tuned for optimum mid-bass response and dispersion. The HF and MR transducers shall be loaded on a integrated, constant directivity, wide dispersion mid-high horn assembly. The system shall have a nominal coverage pattern of 110° (horizontal) x 40° (vertical). The loudspeaker enclosure shall have a rectangular shape and shall incorporate, two top handles. Enclosure incorporates M10 suspension points, three M10 suspension points on the top, one in the handles, three M10 on the bottom and one M10 suspension point on the back. The speaker cabinet shall be finished with an ultra wear resistant black polymer coating and fitted with a weather resistant perforated steel grill. The system shall receive power from a separate ESR3000MkII Amplifer.

ESR3000MkII Amplifier - Controller module consisting of separate power amplifiers for high, midrange and midbass transducers as well as signal processing including electronic band pass crossover filters, phase alignment, time correction, equalization and speaker protection. The speaker system shall connect to the Amplifier/Controller Module via proprietary cables terminated in Amphenol AP-6 connectors. The three-way mid / high loudspeaker system shall be the KV2 Audio ESR215S.

Mid/Hi speaker cable MH15

part name:
Cable MH15
part number:
KVV 987 147
description:
- 6 wire speaker cable
- AP6 connectors
- 1,5 m (5ft) length
- daisy-chaining
- Mid/Hi Module connection or for Mid/Hi Module



Mid/Hi speaker cable MH60

part name:
Cable MH60
part number:
KVV 987 125
description:
- 6 wire speaker cable
- AP6 connectors
- 6 m (20ft)
- Mid/Hi Module hook-up



Mid/Hi speaker cable MH120

part name:
Cable MH120
part number:
KVV 987 126
description:
- 6 wire speaker cable
- AP6 connectors
- 12 m (40ft) length
- for Mid/Hi Module hook-up



Mid/Hi speaker cable MH180

part name:
Cable MH180
part number:
KVV 987 127
description:
- 6 wire speaker cable
- AP6 connectors
- 18 m (60ft) length
- Mid/Hi Module hook-up



Cable KIT

part name:
CABLE-KIT
part number:
KVV 987 047
description:
- 2 pcs LF15
- 1pc LF40
- 1pc MH60
- consist of four
- high-quality Amphenol AP cable assemblies



Amphenol AP6 connector

part name:
AP-6-11
part number:
KA031
description:
- female
- cable mount



Amphenol AP6 connector

part name:
AP-6-12
part number:
KA033
description:
- male
- cable mount



Speaker cable 6 x 2,5m

part name:
1m - round flexible speaker cable, cross section 6 x 2.5 mm
part number:
WX 004

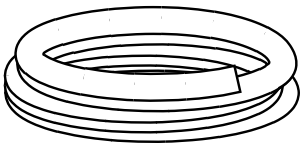

Recommended speaker cable lenghts

MINIMUM CROSS SECTION [mm²]	LENGTH [m], impedance 4Ω	LENGTH [m], impedance 8Ω	LENGTH [m], impedance 16Ω
1.5	8	15	30
2.5	15	30	60
2 x 2.5	20	40	90
4	25	50	100

Parts & Components

The ESR BRACKETS and FLYBARS consist of one individual Horizontal bracket and one Vertical (FLYBAR), for the ESR212 and ESR215MkII and are identified as:

Horizontal Bracket for ESR212

part name:
Horizontal Bracket ESR212
part number:
KVV 987 322
description:
- 2 handle plates with angle apertures
- 1 pc allen key
- 8 pcs M8 x 35 Hex screws
- 2 pcs 6mm Lock Quick Pins
- 2 pcs Handscrew locks

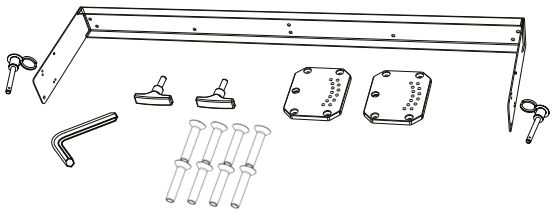

Horizontal Bracket for ESR215MkII

part name:
Horizontal Bracket ESR215MkII
part number:
KVV 987 321
description:
- 2 handle plates with angle apertures
- 1 pc allen key
- 8 pcs M8 x 35 Hex screws
- 2 pcs 6mm Lock Quick Pins
- 2 pcs Handscrew locks

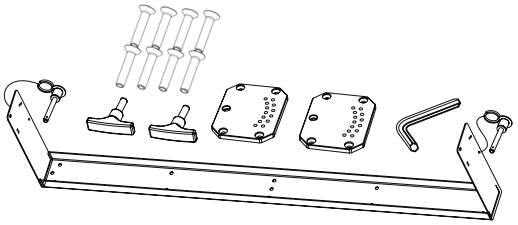

Vertical Bracket for ESR212

part name:
Vertical Bracket ESR212
part number:
KVV 987 291
description:
- 1 pc allen key
- 3 pcs M10 x 35 Hex screws

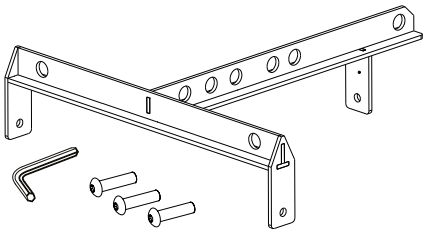

Vertical Bracket for ESR215MkII

part name:
Vertical Bracket ESR215MkII
part number:
KVV 987 292
description:
- 1 pc allen key
- 3 pcs M10 x 35 Hex screws

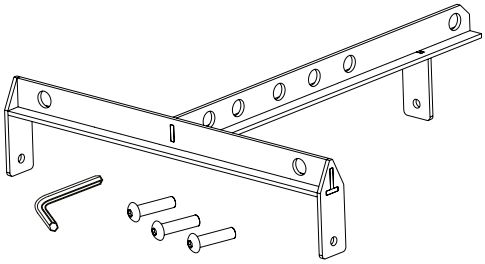

The ESR212 and ESR215MkII Horizontal Bracket and Vertical (FLYBAR) Bracket is a dedicated system to facilitate fast and safe suspension of a single ESR212 or ESR215MkII unit,.

***NOTE* The ESR Horizontal Bracket and Vertical (FLYBAR) Bracket is not certified to allow any suspension of additional enclosures, or cabinet from cabinet.**

The ESR212 AND 215MkII Horizontal Bracket is a fixed steel folded edge bar with extended arms at each end.
The main horizontal bar has multiple apertures across the top plate to allow flexible attachments such as clamps, Eye-bolts and threads to facilitate connection to hoists, truss etc.
To secure the HORIZONTAL BRACKET to the ESR unit, there are SINGLE fixing points on each extended arm, to allow the attachment to the ESR HANDLE PLATE unit via use of a handscrew, or via quick-lock pins through 6 pre-selected angle-apertures.
The Handle plate is secured to the ESR Internal Handle via 4 x M10 hex screwthreads.

The ESR212 and 215MkII Vertical (FLYBAR) Bracket is a pre-fixed steel T-bar with folded edges and short extension arms at each end and a small arm at the rear.
The long bar has prefixed apertures along the top plate to allow attachments such as clamps, Eye-bolts and threads to facilitate connection to hoists, truss etc.
On each short arm, there is a single aperture that allows the fixing of the Vertical Flybar Bracket to the ESR topside units and there is a similar aperture on the short rear arm for connection to the rear of the ESR units.

Vertical Bracket ESR212

The ESR212 Vertical (FLYBAR) Bracket has 6 fixed aperture angles positioned along the Front to Back spine of the unit allowing varied angled inclination from +30 to -4 degrees.

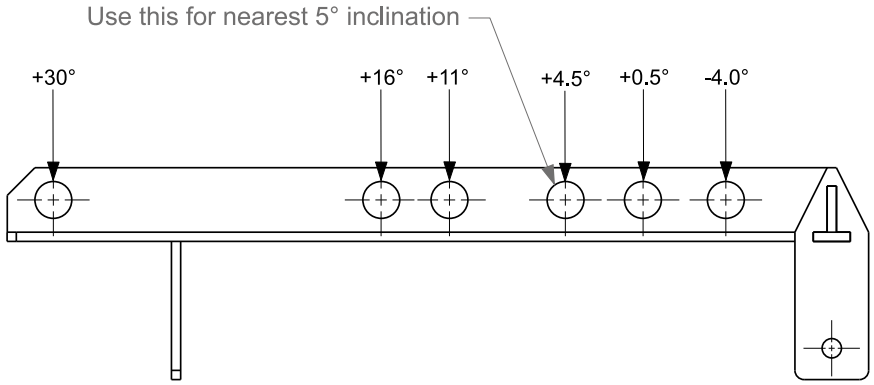

Use these points for the main pick point of suspension.

Vertical Bracket ESR215MkII

The ESR215MkII Vertical (FLYBAR) Bracket has 6 fixed aperture angles positioned along the front to back spine of the unit allowing varied angled inclination from +25 to -4.5 degrees.

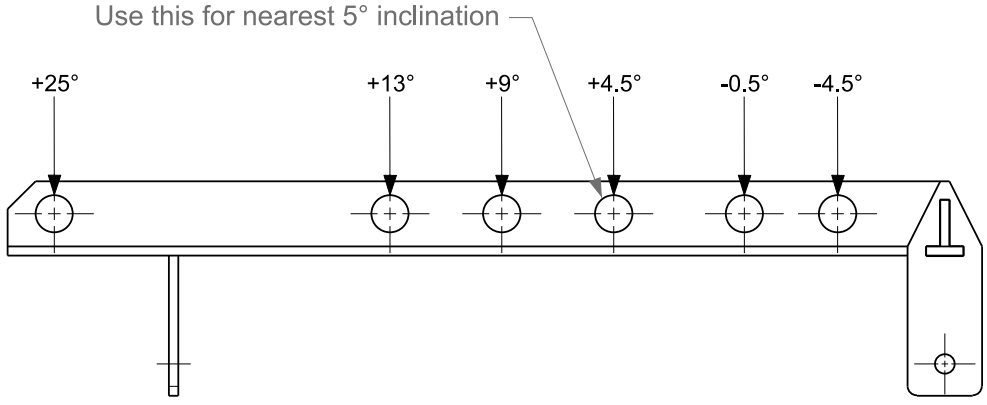

Use these points for the main pick point of suspension.

Warranty

Your ESR Series is covered against defects in material and workmanship.

Refer to your supplier for more details.

Service

In the unlikely event that your ESR Series develops a problem, it must be returned to an authorized distributor, service centre or shipped directly to the KV2 Audio factory. Because of the complexity of the design and the risk of electrical shock, all repairs must be attempted only by qualified technical personnel.

If the unit needs to be shipped back to the factory, it must be sent in its original carton. If improperly packed, the unit may be damaged.

To obtain service, contact your nearest KV2 Audio Service Centre, Distributor or Dealer.



The Future of Sound.
Made Perfectly Clear.

KV2 Audio International
Nádražní 936, 399 01 Milevsko
Czech Republic

Tel.: +420 383 809 320
Email: info@kv2audio.com

www.kv2audio.com

KVV120120-00-08-0