ESP1000

User Guide



Important Safety Instructions

Before using your ESP1000 Amplifier, be sure to carefully read the applicable items of these operating instructions and the safety suggestions.

1. **Read all product instructions.**
2. **Keep printed instructions, do not throw away.**
3. **Respect and review all warnings.**
4. **Follow all instructions.**
5. **Do not use this unit near water, in unprotected outdoor areas or in rain or wet conditions.**
6. **Clean only with dry cloth.**
7. **Do not block any ventilation openings.**
8. **Install in accordance with KV2 Audio's recommended installation instructions.**
9. **Do not install near any heat sources such as heat radiators, heat registers, stoves or other apparatus that produce heat.**
10. **Do not defeat the safety purpose of the grounding type plug. A grounding type plug has two blades and a third grounding connector. The third connector is provided for your safety. If the provided plug does not fit into your outlet, consult an electrician for replacement of the obsolete outlet.**
11. **Protect the power cord from being walked on or pinched, particularly at plugs, convenience receptacles. The AC mains plug or appliance coupler shall remain readily accessible for operation.**
12. **Only use accessories specified by KV2 Audio.**
13. **Install the product only with rigging specified by KV2 Audio, or sold with the amplifier.**
14. **Unplug this amplifier during lightning storms or when unused for long periods of time.**
15. **Refer all servicing to qualified service personnel. Servicing is required when the amplifier has been damaged in any way, such as when the power-supply cord or plug has been damaged; liquid has been spilled or objects have fallen into the amplifier; rain or moisture has entered the amplifier; the amplifier has been dropped; or when for undetermined reasons the amplifier does not operate normally.**
16. **Do not remove front or back panels. Removal of the panel will expose hazardous voltages. There are no user serviceable parts inside and removal may void the warranty.**
17. **An experienced user shall always supervise this professional audio equipment.**

CAUTION: TO REDUCE THE RISK OF ELECTRIC SHOCK, DO NOT REMOVE THE PANELS.
NO USER-SERVICEABLE PARTS INSIDE. REFER SERVICING TO QUALIFIED PERSONNEL.

WARNING: To prevent fire or electric shock, do not expose this equipment to rain or moisture.

SAFETY SUMMARY

To reduce the risk of electric shock, disconnect the amplifier from the AC mains before installing audio cable. Reconnect the power cord only after making all signal connections. Connect the amplifier to a two-pole, three-wire grounding mains receptacle. The receptacle must be connected to a fuse or circuit breaker. Connection to any other type of receptacle poses a shock hazard and may violate local electrical codes. Do not allow water or any foreign object to get inside the amplifier. Do not put objects containing liquid on or near the unit. To reduce the risk of overheating the amplifier, avoid exposing it to direct sunlight. Do not install the unit near heat-emitting appliances, such as a room heater or stove. This amplifier contains potentially hazardous voltages. Do not attempt to disassemble the unit. The unit contains no user serviceable parts, repairs should be performed only by factory trained service personnel.

Contents

Introduction **3**

Introduction 3

Getting Started **4**

Unpacking 4

Rack mounting 4

Cooling 4

AC Power requirements 4

AC Power 4

Voltage requirements 5

The Power Connector 5

Current Requirements 5

Current Draw 6

AC Cable Colour Coding 6

Safety Summary 6

Features **7**

Front Panel 7

Rear Panel 8

Specifications **9**

Drawing **10**

Configuration **11**

Position A 11

Position B 12

Position C 13

Position D 14

Position E 15

Position F 16

Warranty · Service **17**

Notes **18 - 20**

ESP1000
VERY HIGH DEFINITION AMPLIFIER

ESP1000 - part number KVV 987 394 (250 V)
KVV 987 393 (230 V)
KVV 987 392 (115 V)



Application

Primarily designed to drive and control the ESD CUBE loudspeaker system and ESD range speakers with superior sound quality.

- Fixed installations
- Portable PA

Introduction

The ESP1000 is a four channel rack mountable power amplifier specifically designed for optimised performance with KV2 Audio's ESD Cube / ESD1.10 subwoofer system. The unit contains four separate 250 watt amplifiers, two independent power supplies (two channels running off each power supply), four signal paths, inputs and outputs as well as limiting and equalization for given passive loudspeaker / subwoofers. Six independent configurations are selectable and it can be used to power any ESD units and other ranges of passive loudspeakers.

Whilst this unit is simple to operate, improper use can be dangerous. This is a very high-powered device that can output high voltages and sizeable currents. Always use safe operating techniques with the ESP1000.

FOR YOUR SAFETY, READ THE IMPORTANT PRECAUTIONS SECTION AS WELL AS THE INPUT, OUTPUT AND POWER CONNECTION SECTIONS OF THIS MANUAL.

Front Panel:

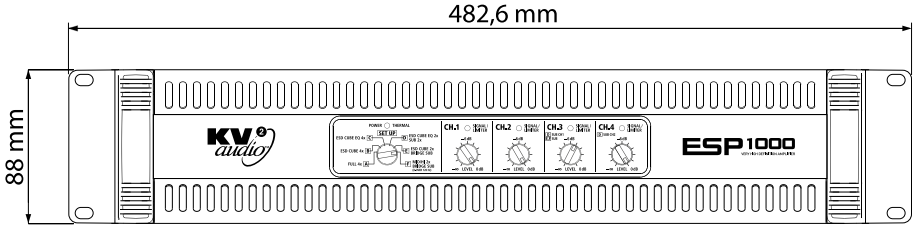

Rear Panel:

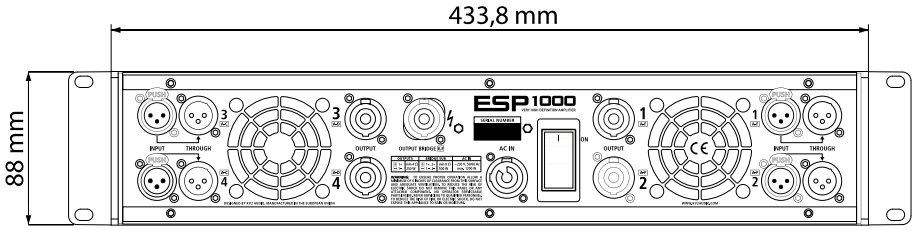

Side Panel:

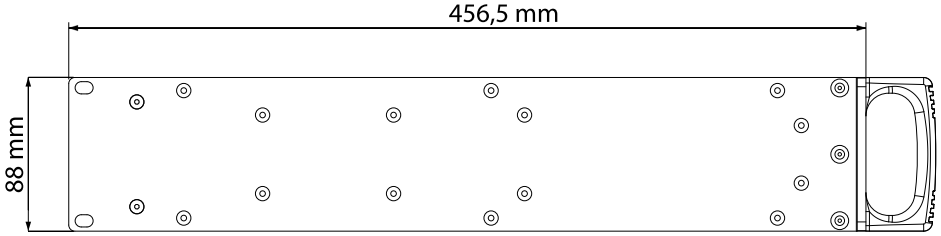

Unpacking

Unpack the ESP1000 and check to see if there is any damage to it. If you find any damage, notify your supplier immediately. Only the consignee may institute a claim with the carrier for any damage incurred during shipping. Be sure to save the carton and all packaging materials for the carrier's inspection.

Should you ever need to ship the unit, only use the original factory packaging. If the shipping carton is unavailable, contact your supplier to obtain a replacement.

The ESP1000 carton should contain:

- ESP1000 power amplifier
- User's Guide
- PowerCon detachable power cable

Rack mounting

The ESP1000 will mount in a standard 19" rack system. Integral rear mounting rack ears are also provided for additional support. It is important that you do not rely on fixing and mounting the ESP1000 using just the front panel as the support. Use eight screws and washers to mount the amplifier to the equipment rack rails, (four for the front and four for the rear). We recommend using a shock mounted rack for touring use to prolong the life of your ESP1000.

Cooling

The ESP1000 has a comprehensive cooling system featuring chassis-sealed PCB board mounting and shock mounted, speed controlled fans. This means that the cooling system never drives air across PCB boards, connectors or components ensuring prolonged electronic component lifespan and minimizing maintenance cycles.

Air is drawn into the front of the amplifier by the two fans on the rear panel, this passes over the cooling fins of the heat sinks and exhausts through the rear. If the heat sink gets too hot, its sensing circuit will open the output relay, disconnecting the load.

It is important to have an adequate air supply at the front of the amplifier, and enough space around the rear of the amplifier to allow the cooling air to escape. If the unit is rack-mounted, do not use doors or covers on the rear of the rack; the exhaust air must flow without restriction. If you are using racks with closed backs, use fans on the rear rack panel to ensure an ample air supply.

AC Power requirements

The ESP1000 is an advanced power amplifier. Understanding power distribution, voltage and current requirements, as well as electrical safety issues, is critical to the safe operation of the ESP1000.

AC Power

The ESP1000 uses a single PowerCon 3-pole AC mains connector with a locking mechanism to prevent accidental disconnection. The main AC connector (blue) serves as the power input.

The ESP1000 operates in either 115 V, 230 V or 250 V modes. Although pre-configured at the factory, the unit's operating voltage mode can be changed in the field.

Voltage requirements

The ESP1000 operates safely and without audio discontinuity if the AC voltage stays within the operating window of 100 V to 120 V in 115 V mode, 205 V to 240 V when working in 230 V mode and 225 to 260 V when working in 250 V mode at 50 or 60 Hz.

CAUTION: IF THE ON LED DOES NOT ILLUMINATE OR THE SYSTEM DOES NOT RESPOND TO AUDIO INPUT, REMOVE AC POWER IMMEDIATELY. VERIFY THAT THE VOLTAGE IS WITHIN THE PROPER RANGE. IF THE PROBLEM PERSISTS, PLEASE CONTACT KV2 AUDIO OR AN AUTHORIZED SERVICE CENTER.

If the voltage drops below the low boundary of its safe operating range, the amplifier will shut down if the voltage does not rise above the low boundary before storage circuits are depleted. How long the amplifier will continue to function during brownout depends on the amount of voltage drop and the audio source level during the drop. If the voltage increases above the upper boundary of the range, the power supply can be damaged.

IT IS RECOMMENDED THAT THE VOLTAGE SUPPLY BE WITHIN THE RATED VOLTAGE WINDOW. THIS ENSURES THAT AC VOLTAGE VARIATIONS FROM THE SERVICE ENTRY - OR PEAK VOLTAGE DROPS DUE TO CABLE RUNS - DO NOT CAUSE THE AMPLIFIER TO CYCLE ON AND OFF OR CAUSE DAMAGE TO THE POWER SUPPLY.

FOR BEST PERFORMANCE, THE AC CABLE VOLTAGE DROP SHOULD NOT EXCEED 10 VOLTS, OR 10 PERCENT AT 115 VOLTS AND 5 PERCENT AT 230 OR 250 VOLTS.

Make sure that even with the AC voltage drop, the AC voltage always stays within recommended operating ranges. The minimum electrical service amperage required by an ESP1000 amplifier is its maximum continuous rms current. An additional 50 percent above that amperage is recommended to prevent peak voltage drops at the service entry.

The Power Connector

The ESP1000 requires grounded outlets. It is very important that the amplifier's AC supply be properly grounded in order to operate safely and properly. Use the PowerCon AC cable-wiring diagram overleaf to create international or special-purpose power connectors:

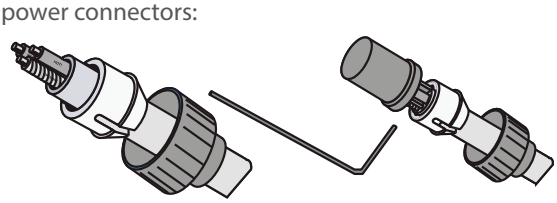

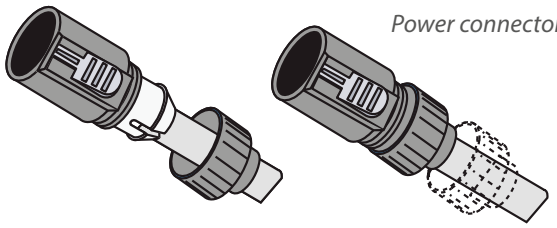

Power connector assembly

Current Requirements

The ESP1000 requires approximately 10 A max at 115 V AC for proper operation. This means that the ESP1000 must be powered from an individual 10 A breaker when running in 115 V mode.

When operating in 230 V or 250 V mode, the ESP1000 requires approximately 5 A max. This allows the ESP1000 to be powered from one 10 A breaker at 230 V.

The ESP1000 presents a dynamic load to the AC mains, which causes the amount of current to fluctuate depending on quiet or loud operating levels. Since different cables and circuit breakers heat up at varying rates, it is essential to understand the types of current ratings and how they correspond to circuit breaker and cable specifications.

The maximum long-term continuous current is the maximum rms current during a period of at least ten seconds. It is used to calculate the temperature rise in cables in order to select a cable size and gauge that conforms to electrical code standards. It is also used to select the rating for slow-reacting thermal breakers.

The burst current is the maximum rms current during a period of approximately one second, used to select the rating of most magnetic breakers and to calculate the peak voltage drop in long AC cables according to the formula:
V pk (drop) = I pk x R (cable total)

The ultimate short-term peak current is used to select the rating of fast reacting magnetic breakers. Use the table below as a guide when selecting cable gauge size and circuit breaker ratings for your operating voltage.

Current Draw

Current Draw	115 V Mode	230 V, 250 V
Max Long Term Continuous	10 A rms	5 A rms
Burst Current	30 A rms	15 A rms
Short Term Peak	80 A peak	40 A peak

AC Cable Colour Coding

If the colours referred to in the diagram don't correspond to the terminals in your plug, use the following guidelines: Connect the blue wire to the terminal marked with an N or coloured black. Connect the brown wire to the terminal marked with an L or coloured red. Connect the green and yellow wire to the terminal marked with an E or coloured green or green and yellow.

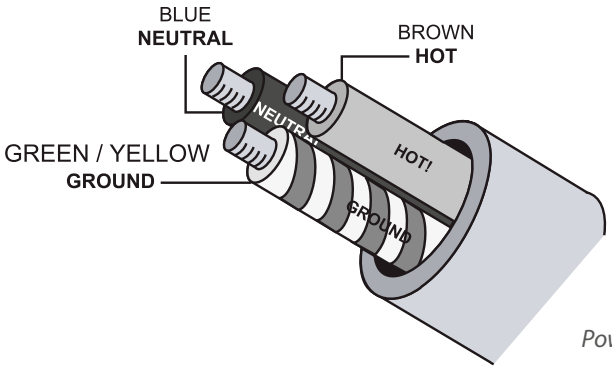

Power cable color coding

CAUTION: THE ESP1000 REQUIRES A GROUND CONNECTION. ALWAYS USE A GROUNDED OUTLET AND PLUG.

Safety Summary

To reduce the risk of electric shock, disconnect the amplifier from the AC mains before installing the audio cable. Reconnect the power cord only after making all signal connections. Connect the amplifier to a two-pole, three-wire grounding mains receptacle. The mains plug shall remain easy to operate. The amplifier must be powered from the same phase as other interconnected powered units.

The receptacle must be connected to a fuse or circuit breaker. Connection to any other type of receptacle poses a shock hazard and may violate local electrical codes. Do not allow water or any foreign object to get inside the amplifier. Do not put objects containing liquid on or near the unit. To reduce the risk of overheating the amplifier, avoid exposing it to direct sunlight. Do not install the unit near heat-emitting appliances, such as a room heater or stove. This amplifier contains potentially hazardous voltages. Do not attempt to disassemble the unit. The unit contains no user serviceable parts, repairs should be performed only by factory trained service personnel.

Front Panel

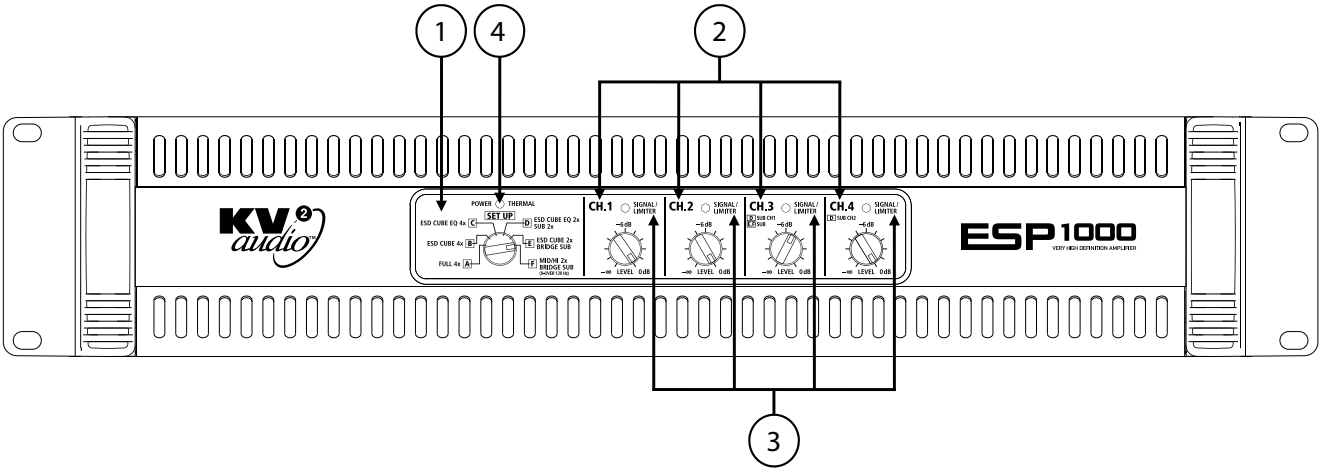

1) Set Up

Selector for 6 independent configurations.

2) Level Controls

Controls levels of channel 1, 2, 3, 4.

3) Signal Present / Limiter Indicator

These are dual colour LEDs. When green they indicate that signal is present at the Input to that particular channel of the amplifier. When yellow they indicate that the audio limiter has been activated for that particular channel of the amplifier.

4) Power / Thermal Protection

These are dual colour LEDs. When green they indicate that the Power Switch is ON and that channel of the amplifier is powered up. When red they indicate that the channel has overheated and shut down. The unit will Auto Reset after it cools down to a safe operating temperature.

Rear Panel

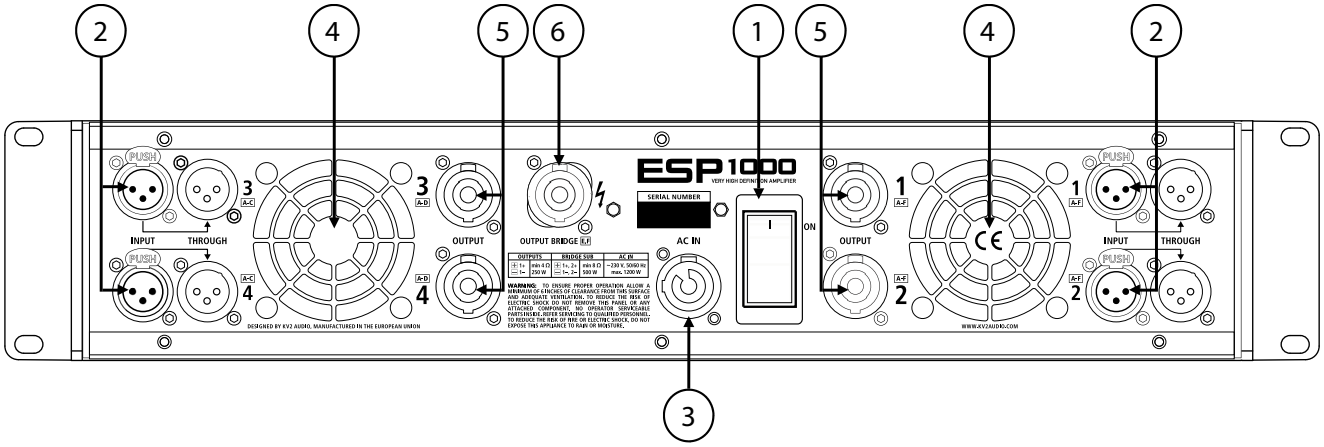

1) AC Mains Switch

The ESP1000 has a combined AC mains switch/circuit breaker on the rear panel. If the switch shuts off during normal use, push it back to the ON position once. If it will not stay on you should take the unit to qualified service personnel to have it serviced.

2) Inputs

As well as being a high quality four channel amplifier solution the ESP1000 is capable of working in "Bridge Mono" Mode. This requires the utilisation of two channels working together to produce a larger single output - suitable for driving large subwoofers. If Bridge Mono Mode is used, only channel input 1 and 2 can be used. The signal for the subwoofer is produced within the internal crossover. Bridge Mono Mode has its own power output.

3) PowerCon Power Connectors

The ESP1000 accepts standard PowerCon terminated AC Mains cables. The ESP1000 uses one connector for all four channels.

4) Fans

The cooling fans operate continuously while the ESP1000 is on. An internal temperature sensor increases the speed of the fans during high temperature conditions. Air enters through the front grille and exits through the rear. Be sure to allow adequate air flow to the front of the rack in which the ESP1000 is mounted.

5) Main Outputs - 1, 2, 3, 4 - outputs for each channel

Each channel of the ESP1000 is equipped with Neutrik speakON® connectors on the Main Outputs. The minimum recommended load impedance is 4 Ω. When operating in Bridge Mono Mode, the minimum recommended load impedance is 8 Ω.

6) Output Bridge

Output for Bridge Mono Mode.

Specifications

System Acoustic Performance	
-1 dB Response	3 Hz to 50 kHz / Flat Setup
Channel Crosstalk	>70 dB
Signal to Noise Ratio	>115 dB
Total Harmonic Distortion	<0.005% (1W) / <0.01% (clip -1 dB)
Output Channels	
Amplifier Type	High Efficiency, Emitter coupled
Number of Channels	4
Total Output Power	1000 W
Minimum load impedance per channel	4 Ω
Out. Power 8 Ω - 1 channel / 2 channels loaded	150 W / 140 W (RMS)
Out. Power 4 Ω - 1 channel / 2 channels loaded	250 W (RMS)
Out. Power 16 Ω - bridged	300 W (RMS)
Out. Power 8 Ω - bridged	500 W (RMS)
Signal Input	
Input Channels	XLR
Input Sensitivity	1.55 V
Input Impedance	20 kΩ (balanced)
Signal Output	XLR Through
Speaker Output	
Speaker Output	Neutrik speakON®
Features	
Level Control	-∞ to 0 dB
Equalization	Flat or according to the setup
RMS Limiter	YES
Indicators	Power ON/Thermal, RMS Limiter, Signal
Power	
Power Connector	Neutrik PowerCon®
Operating Voltage	115 V / 230 V / 250 V
Operating Voltage Range	100 to 120 V @ 60 Hz | 205 to 240 V @ 50 Hz | 225 to 260 V @ 50 Hz
Recommended Amperage	10 A 115 V | 5 A 230 V | 5 A 250 V
Soft Start	YES
Protection	Thermal breaker
Cooling	2x temperature controlled fans
Physical Dimensions	
Height	88 mm (3.5"), 2RU
Width	483 mm (18.95")
Depth	495 mm (19.5")
Weight	17.8 kg (39.2 lb)

Drawing

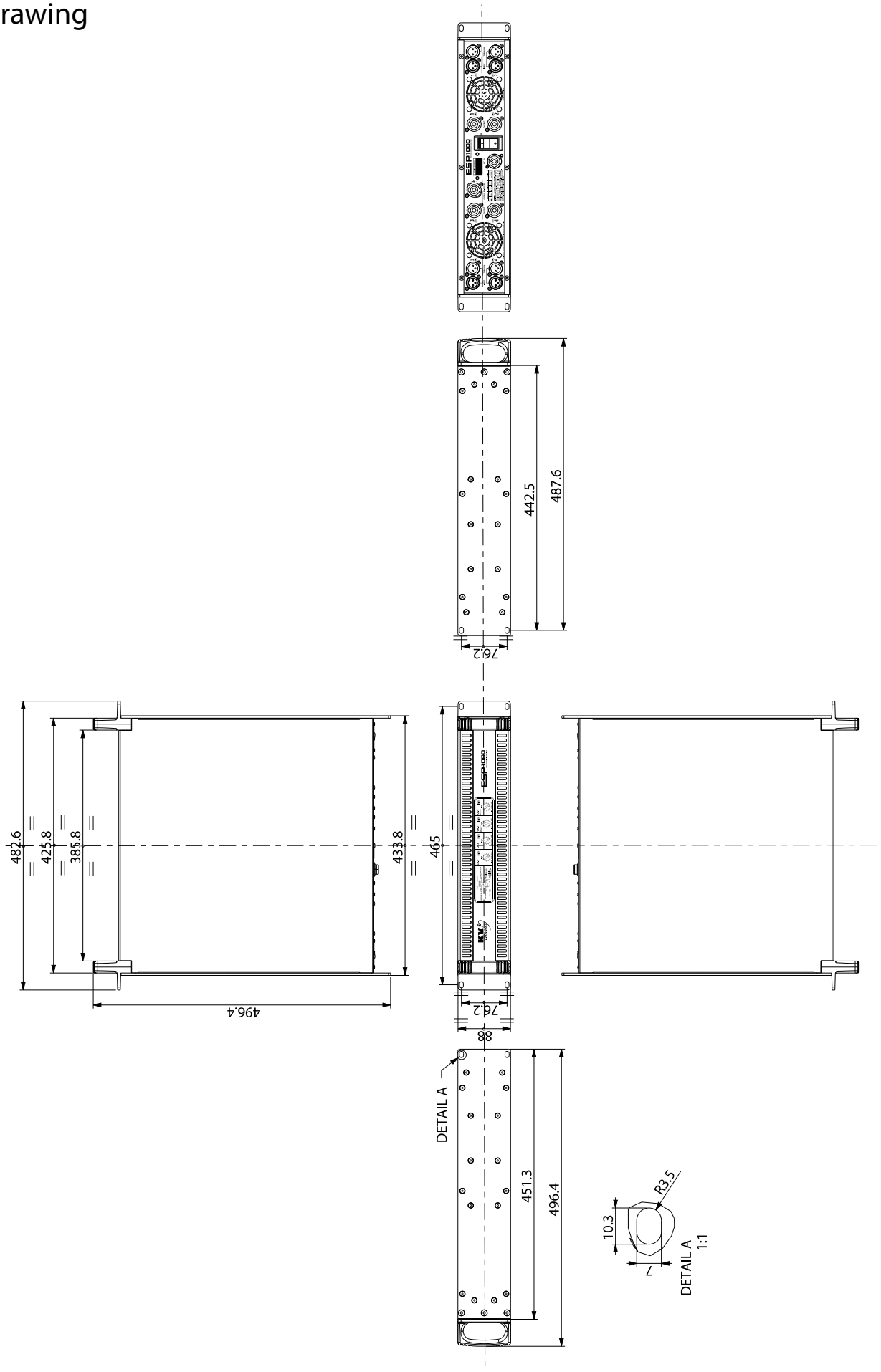
442.5
487.6
76.2
482.6
425.8
385.8
433.8
465
496.4
76.2
88
DETAIL A
451.3
496.4
R3.5
10.3
7
DETAIL A
1:1

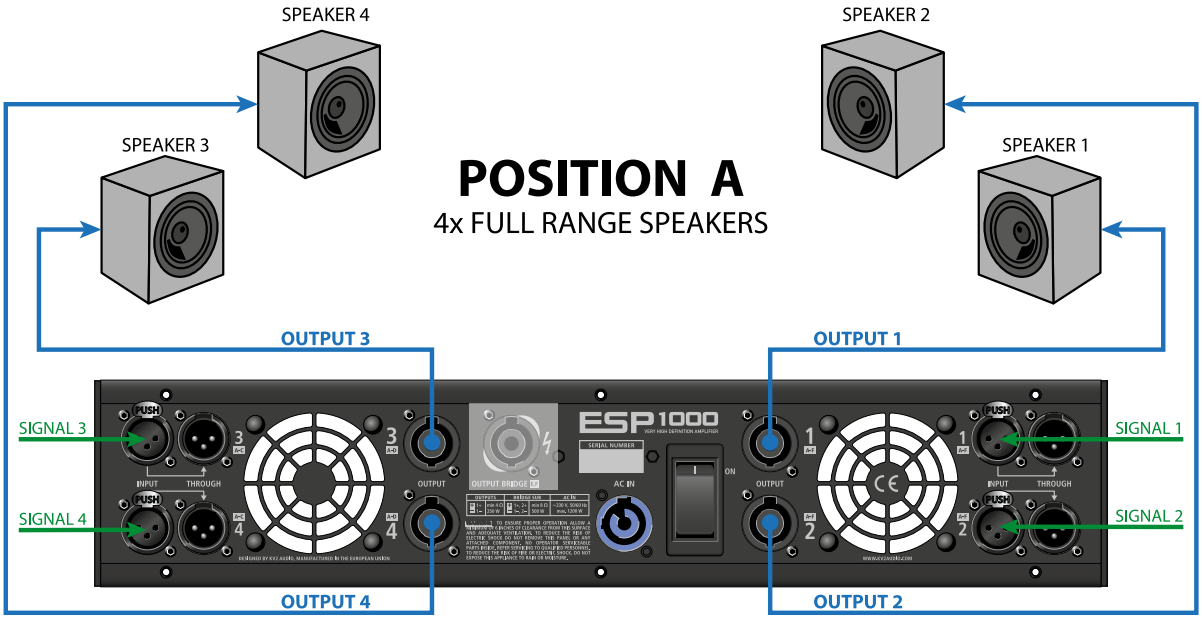
SPEAKER 4
SPEAKER 2
SPEAKER 3
SPEAKER 1
POSITION A
4x FULL RANGE SPEAKERS
OUTPUT 3
OUTPUT 1
SIGNAL 3
SIGNAL 1
SIGNAL 4
SIGNAL 2
OUTPUT 4
OUTPUT 2
ESP1000


ESP1000

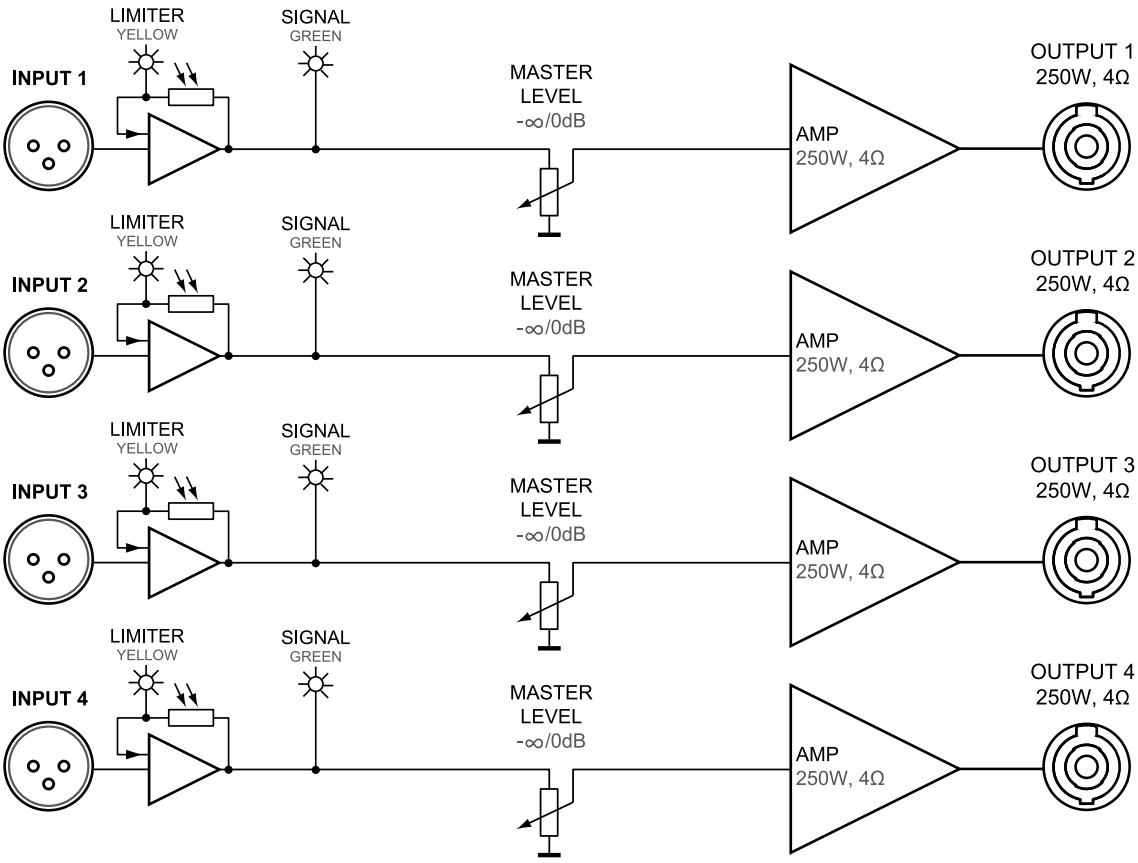
INPUT 1
INPUT 2
INPUT 3
INPUT 4
LIMITER
YELLOW
SIGNAL
GREEN
MASTER
LEVEL
-∞/0dB
AMP
250W, 4Ω
OUTPUT 1
250W, 4Ω
OUTPUT 2
250W, 4Ω
OUTPUT 3
250W, 4Ω
OUTPUT 4
250W, 4Ω

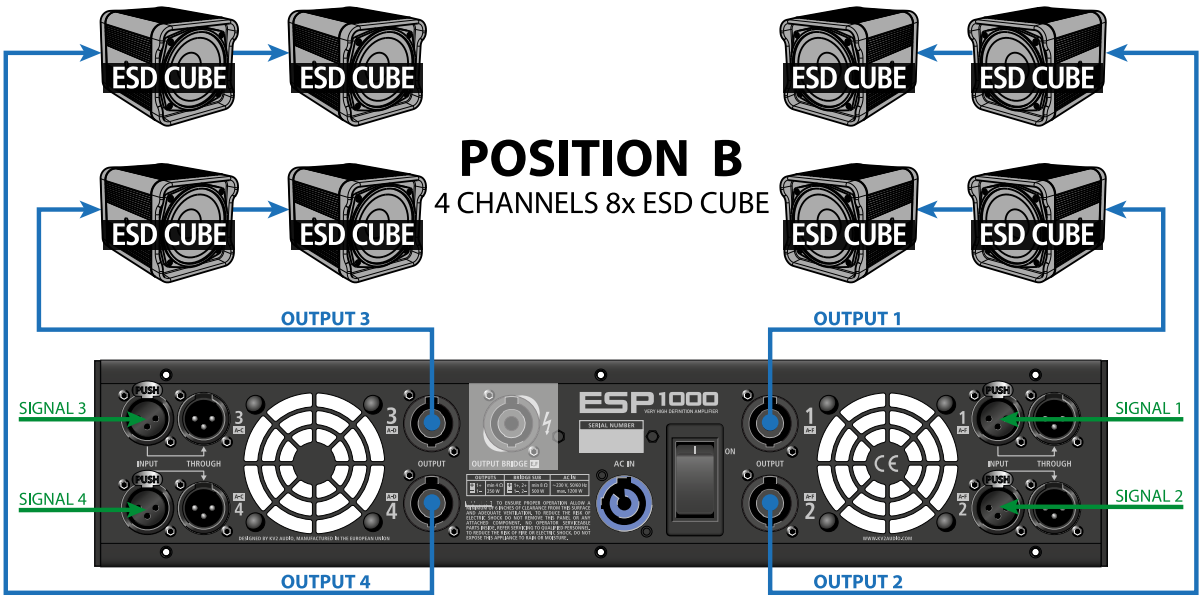
ESD CUBE
ESD CUBE
ESD CUBE
ESD CUBE
ESD CUBE
ESD CUBE
ESD CUBE
ESD CUBE
POSITION B
4 CHANNELS 8x ESD CUBE
OUTPUT 3
OUTPUT 1
SIGNAL 3
SIGNAL 4
SIGNAL 1
SIGNAL 2
OUTPUT 4
OUTPUT 2


ESP1000

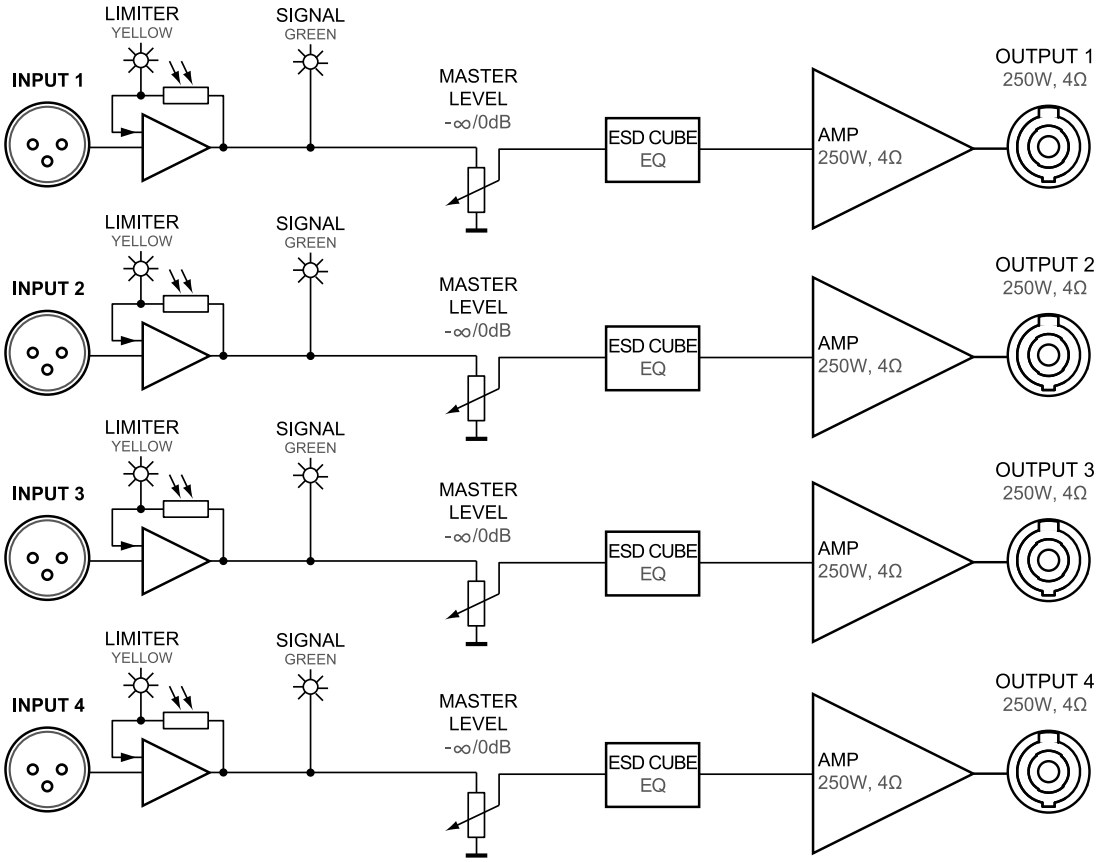
INPUT 1
LIMITER
YELLOW
SIGNAL
GREEN
MASTER
LEVEL
-∞/0dB
ESD CUBE
EQ
AMP
250W, 4Ω
OUTPUT 1
250W, 4Ω
INPUT 2
OUTPUT 2
INPUT 3
OUTPUT 3
INPUT 4
OUTPUT 4

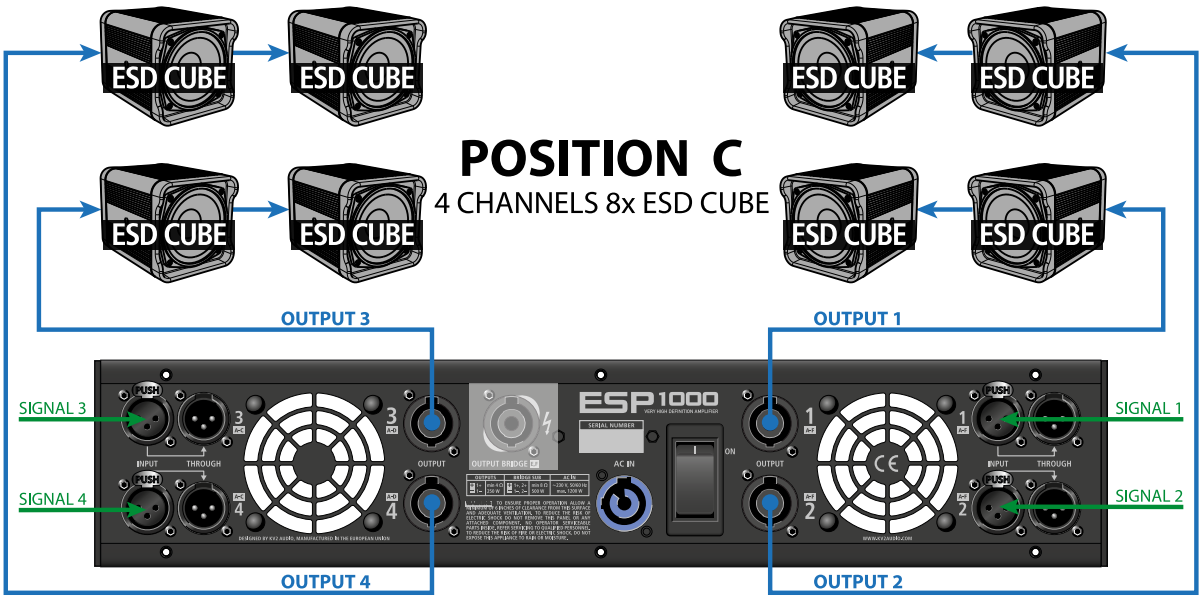
ESD CUBE
ESD CUBE
ESD CUBE
ESD CUBE
ESD CUBE
ESD CUBE
ESD CUBE
ESD CUBE
POSITION C
4 CHANNELS 8x ESD CUBE
OUTPUT 3
OUTPUT 1
SIGNAL 3
SIGNAL 4
SIGNAL 1
SIGNAL 2
OUTPUT 4
OUTPUT 2


ESP1000

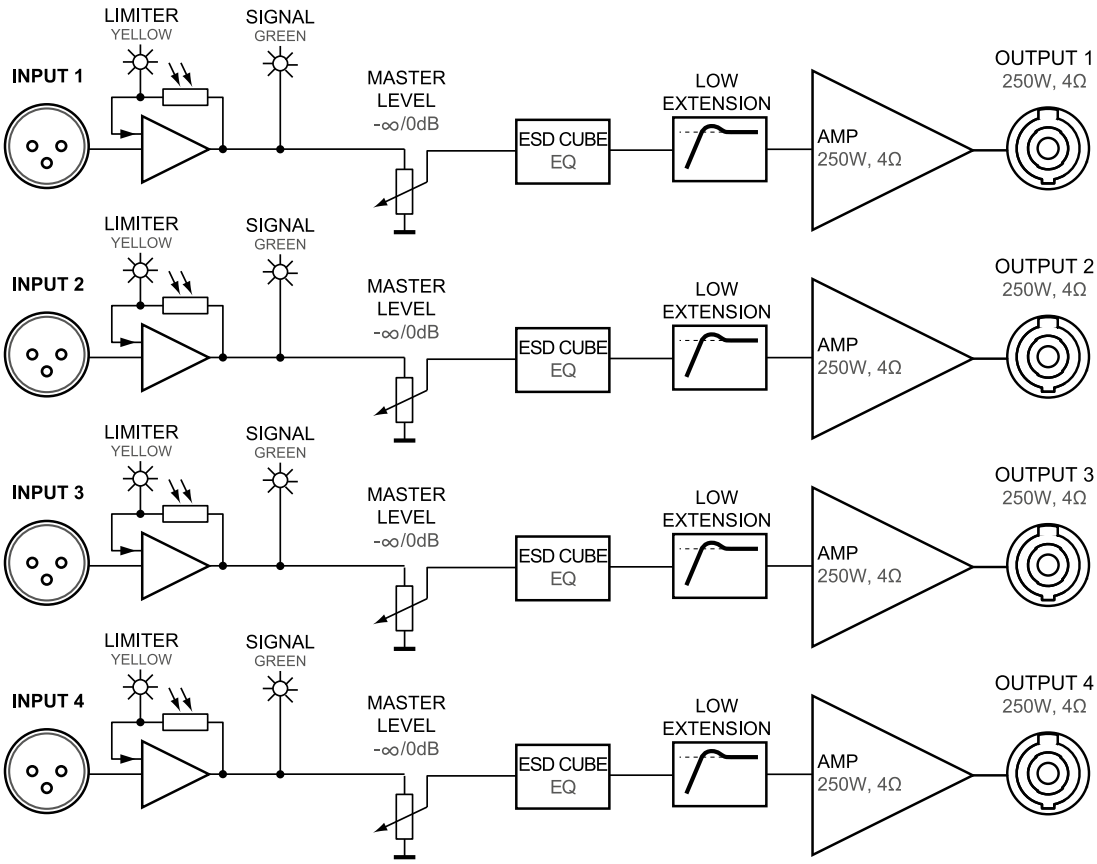
INPUT 1
INPUT 2
INPUT 3
INPUT 4
LIMITER
YELLOW
SIGNAL
GREEN
MASTER
LEVEL
-∞/0dB
ESD CUBE
EQ
LOW
EXTENSION
AMP
250W, 4Ω
OUTPUT 1
250W, 4Ω
OUTPUT 2
250W, 4Ω
OUTPUT 3
250W, 4Ω
OUTPUT 4
250W, 4Ω

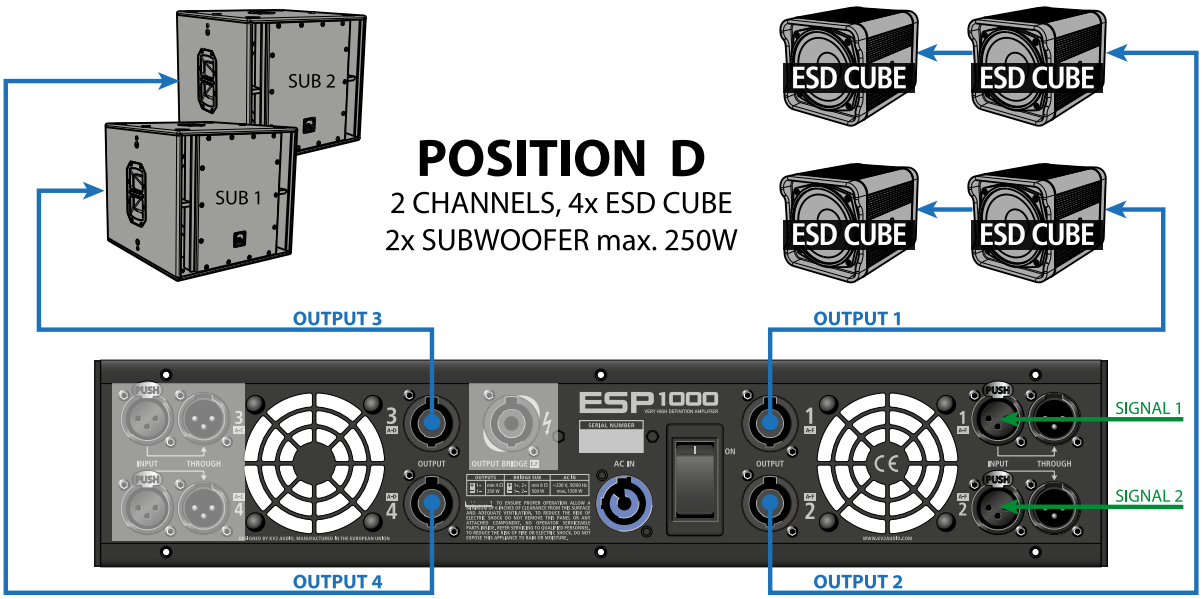
SUB 2
SUB 1
ESD CUBE
ESD CUBE
ESD CUBE
ESD CUBE
POSITION D
2 CHANNELS, 4x ESD CUBE
2x SUBWOOFER max. 250W
OUTPUT 3
OUTPUT 1
ESP1000
SIGNAL 1
SIGNAL 2
OUTPUT 4
OUTPUT 2


ESP1000
SUB2 LEVEL
SUB1 LEVEL

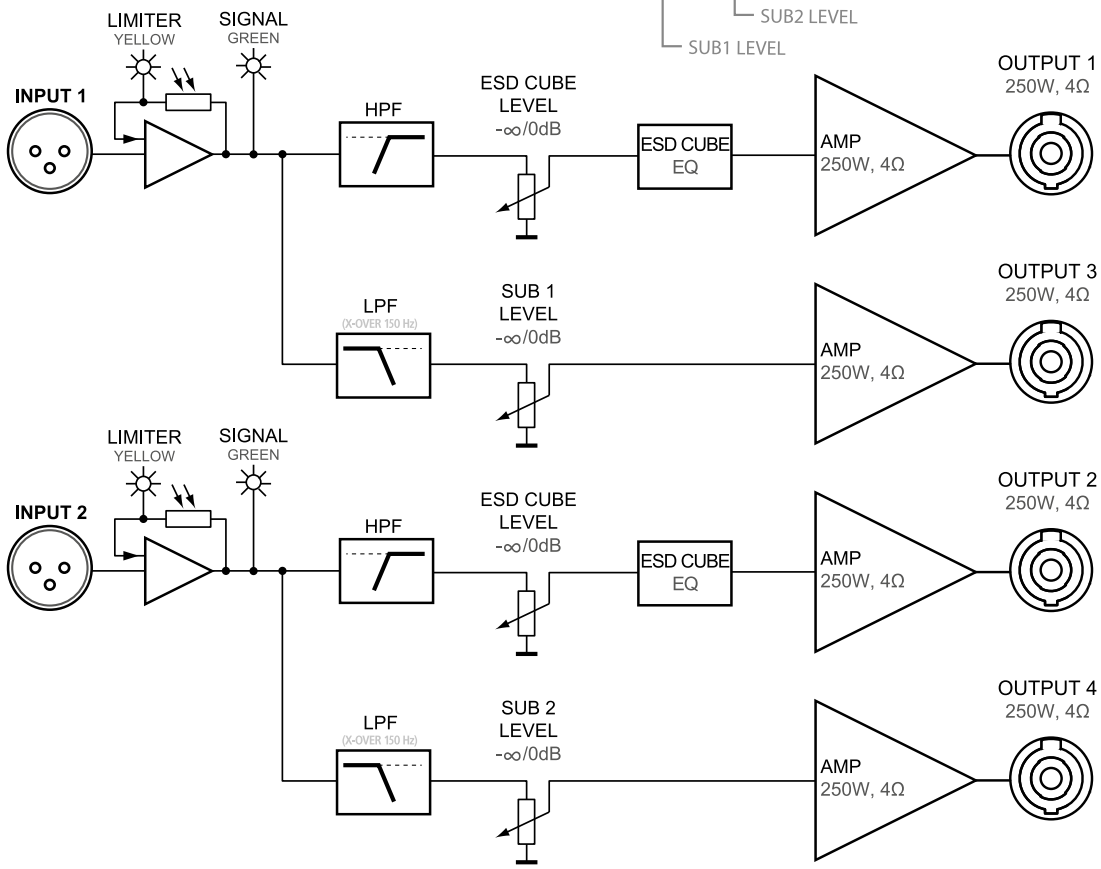
LIMITER
YELLOW
SIGNAL
GREEN
INPUT 1
HPF
ESD CUBE
LEVEL
-∞/0dB
ESD CUBE
EQ
AMP
250W, 4Ω
OUTPUT 1
250W, 4Ω
LPF
(X-OVER 150 Hz)
SUB 1
LEVEL
-∞/0dB
AMP
250W, 4Ω
OUTPUT 3
250W, 4Ω
LIMITER
YELLOW
SIGNAL
GREEN
INPUT 2
HPF
ESD CUBE
LEVEL
-∞/0dB
ESD CUBE
EQ
AMP
250W, 4Ω
OUTPUT 2
250W, 4Ω
LPF
(X-OVER 150 Hz)
SUB 2
LEVEL
-∞/0dB
AMP
250W, 4Ω
OUTPUT 4
250W, 4Ω

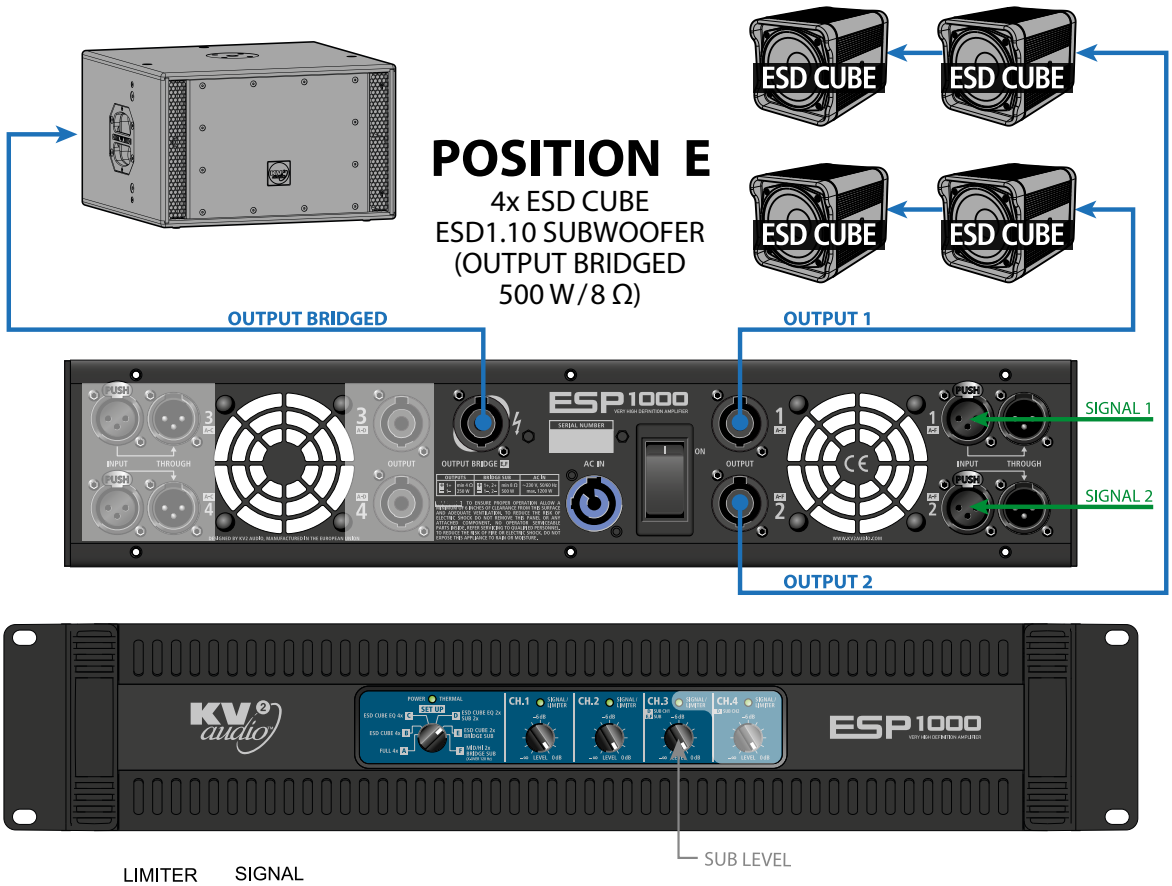
POSITION E
4x ESD CUBE
ESD1.10 SUBWOOFER
(OUTPUT BRIDGED
500 W / 8 Ω)
ESD CUBE
ESD CUBE
ESD CUBE
ESD CUBE
OUTPUT BRIDGED
OUTPUT 1
OUTPUT 2
SIGNAL 1
SIGNAL 2
ESP1000
SUB LEVEL

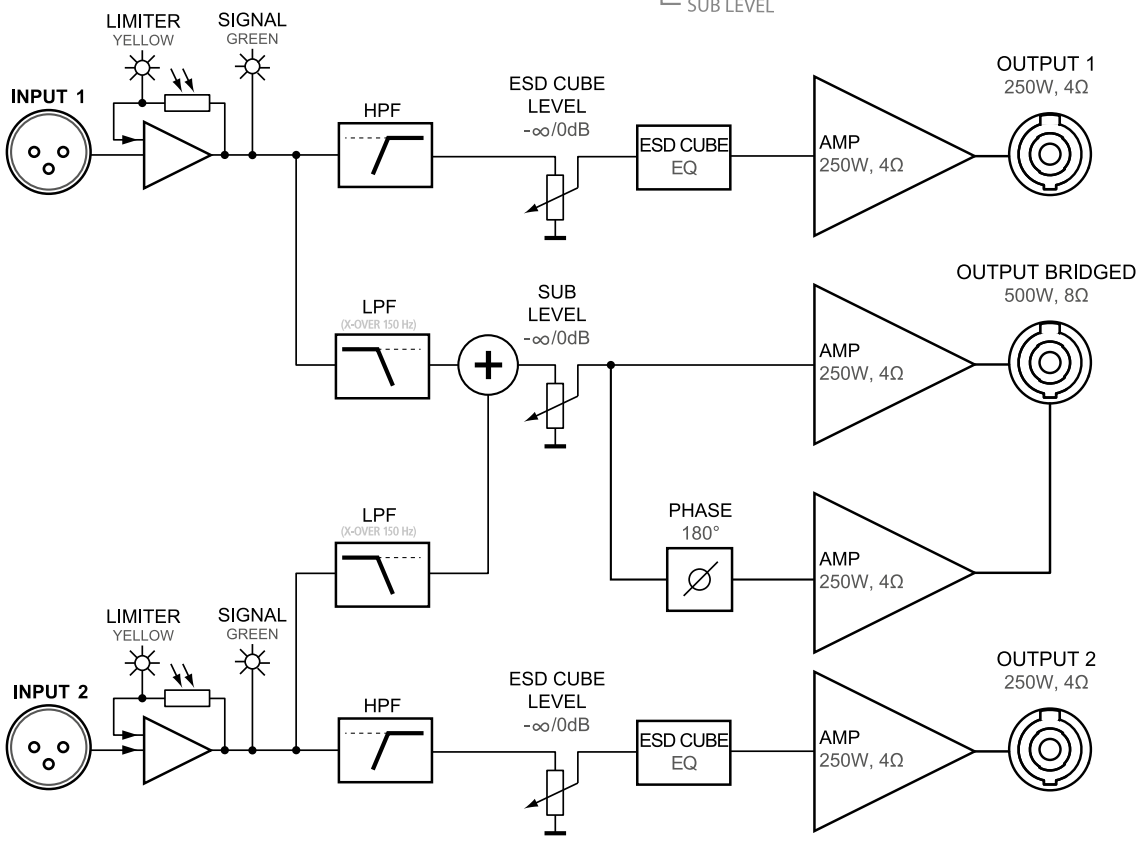
INPUT 1
LIMITER
YELLOW
SIGNAL
GREEN
HPF
ESD CUBE
LEVEL
-∞/0dB
ESD CUBE
EQ
AMP
250W, 4Ω
OUTPUT 1
250W, 4Ω
LPF
(X-OVER 150 Hz)
SUB
LEVEL
-∞/0dB
OUTPUT BRIDGED
500W, 8Ω
PHASE
180°
INPUT 2
OUTPUT 2
250W, 4Ω

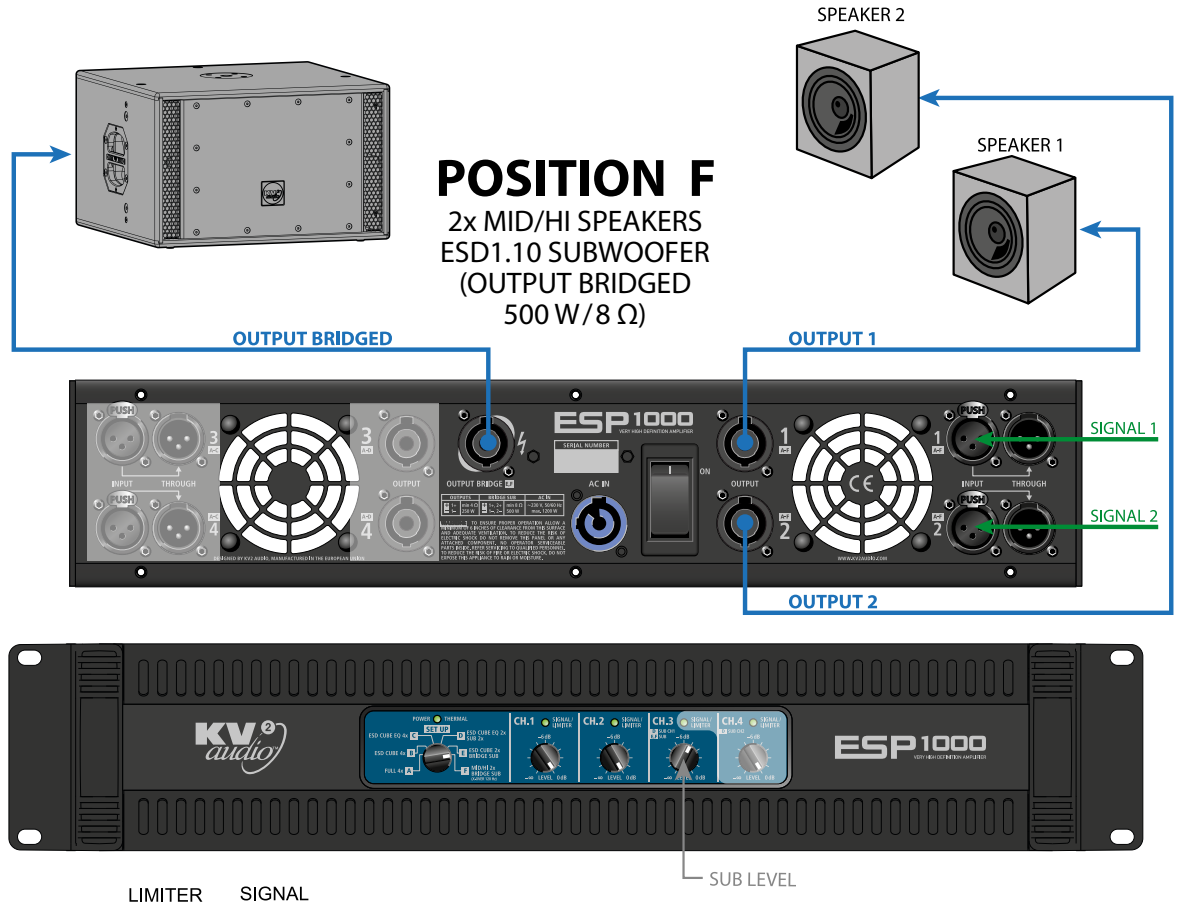
SPEAKER 2
SPEAKER 1
POSITION F
2x MID/HI SPEAKERS
ESD1.10 SUBWOOFER
(OUTPUT BRIDGED
500 W / 8 Ω)
OUTPUT BRIDGED
OUTPUT 1
SIGNAL 1
SIGNAL 2
OUTPUT 2
ESP1000
SUB LEVEL

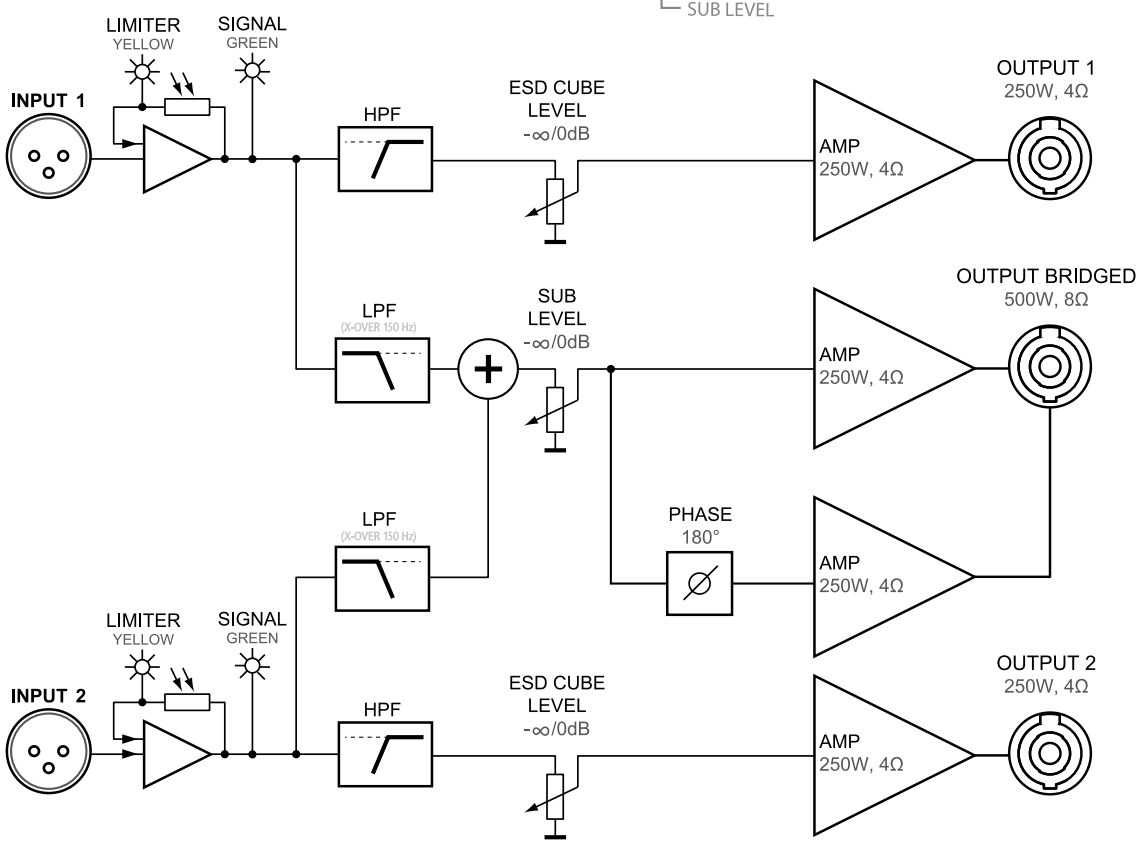
INPUT 1
LIMITER
YELLOW
SIGNAL
GREEN
HPF
ESD CUBE
LEVEL
-∞/0dB
AMP
250W, 4Ω
OUTPUT 1
250W, 4Ω
LPF
(X-OVER 150 Hz)
SUB
LEVEL
-∞/0dB
OUTPUT BRIDGED
500W, 8Ω
PHASE
180°
INPUT 2
OUTPUT 2
250W, 4Ω

Warranty

Your ESP1000 amplifier is covered against defects in material and workmanship.

Refer to your supplier for more details.

Service

In the unlikely event that your ESP1000 amplifier develops a problem, it must be returned to an authorized distributor, service centre or shipped directly to the KV2 Audio factory. Because of the complexity of the design and the risk of electrical shock, all repairs must be attempted only by qualified technical personnel.

If the unit needs to be shipped back to the factory, it must be sent in its original carton. If improperly packed, the unit may be damaged.

To obtain service, contact your nearest KV2 Audio Service Centre, Distributor or Dealer.



The Future of Sound.
Made Perfectly Clear.

KV2 Audio International a.s.
Nádražní 936, 399 01 Milevsko
Czech Republic

Tel.: +420 383 809 320
Email: info@kv2audio.com

www.kv2audio.com

KVV120136-00-02-0