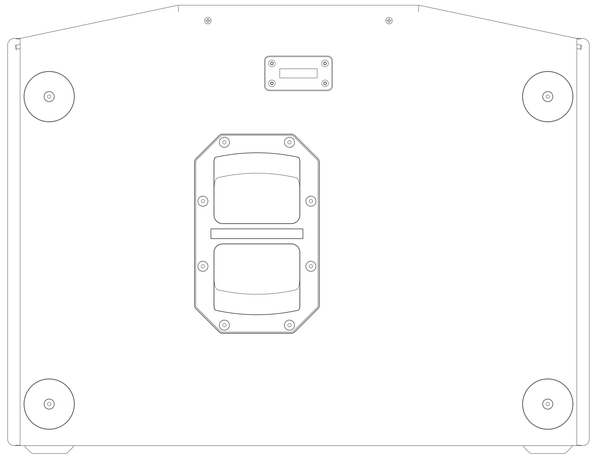

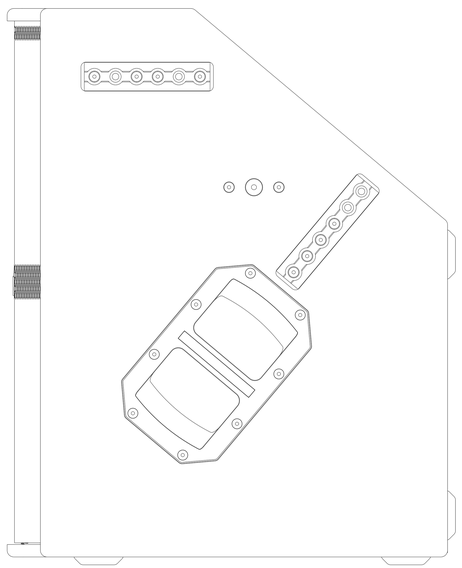

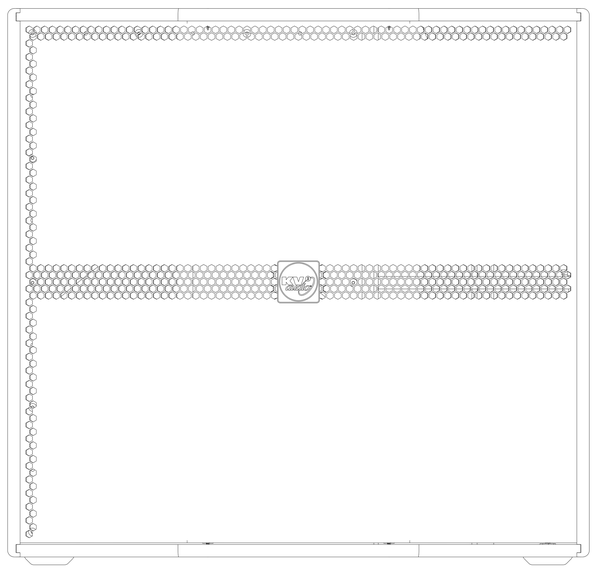

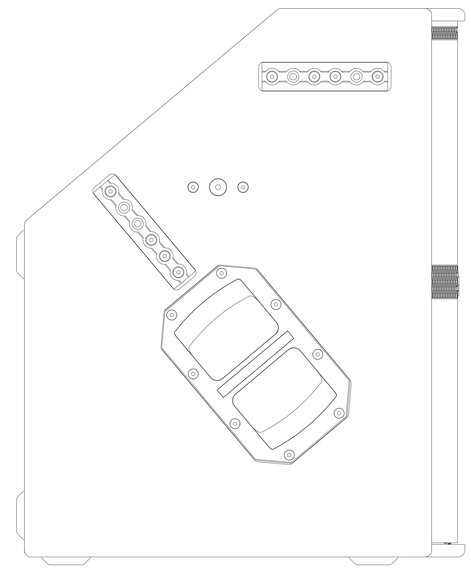

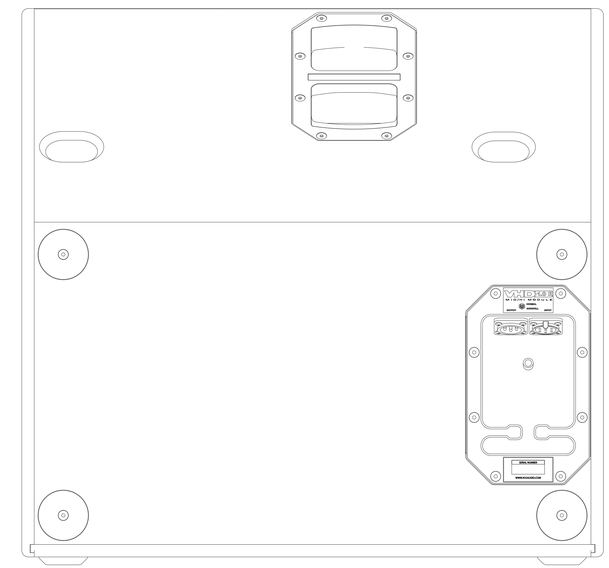

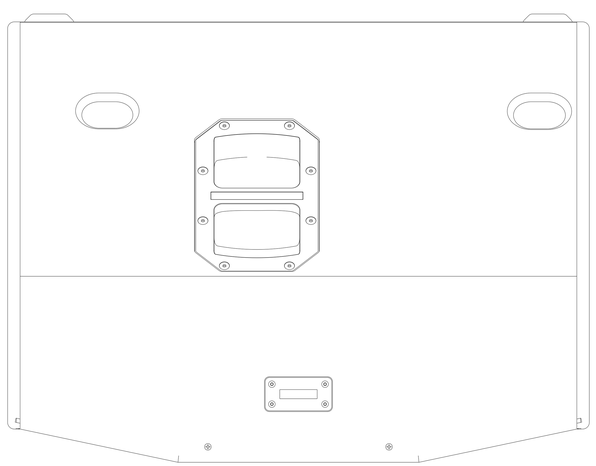

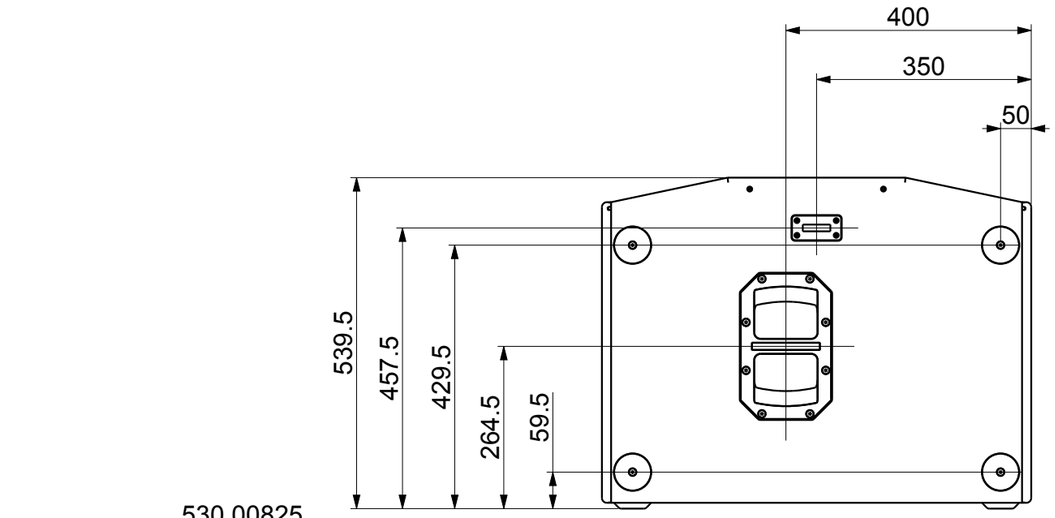

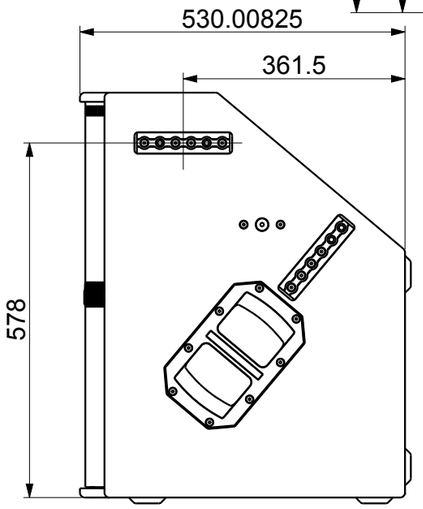

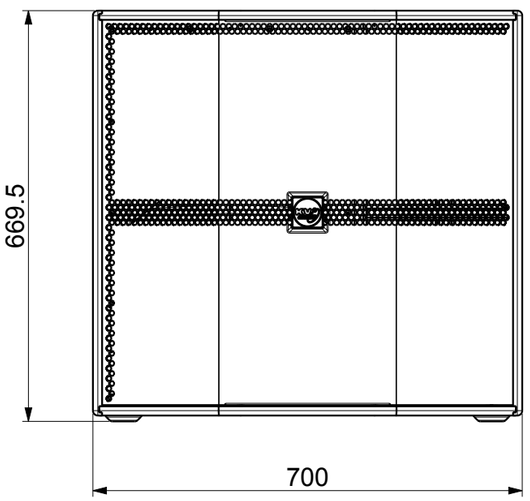

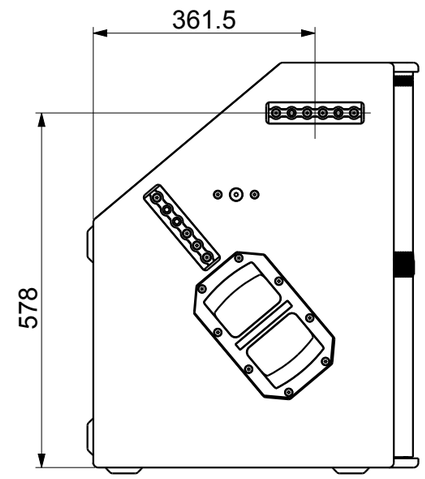

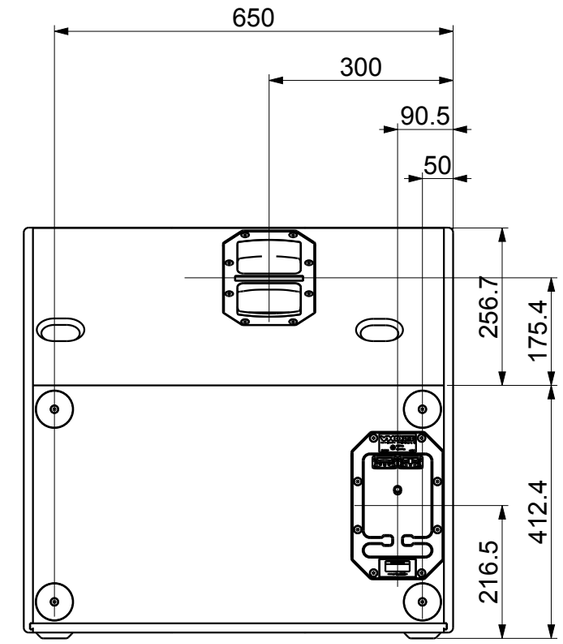

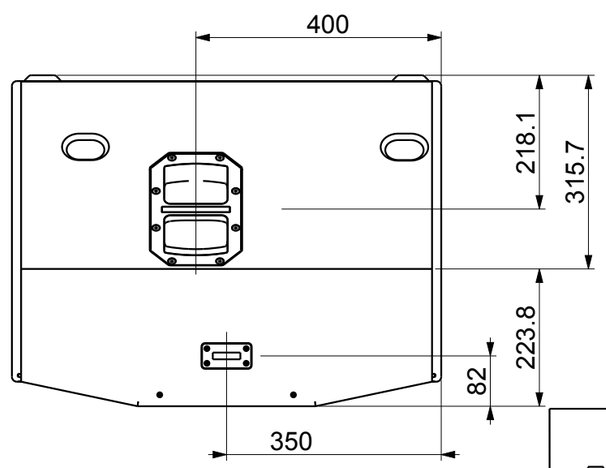

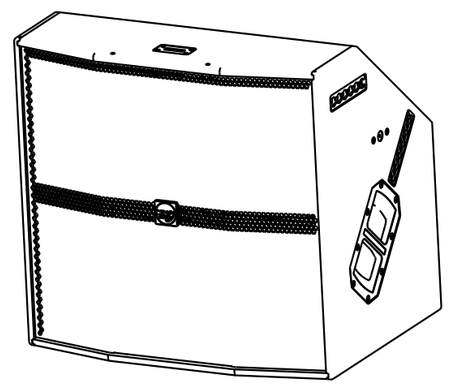

Nadrazni 936, 399 01 MILEVSKO
CZECH REPUBLIC
e-mail: kv2@kv2.cz
tel.: + 420 382 52

PRODUCT NAME:	VHD 1.0 RIGHT
PRODUCT NUMBER:	KVV 987 141
REVISION:	1