Configurations

Position A / Full Range Amplification

4x Full Range Speakers

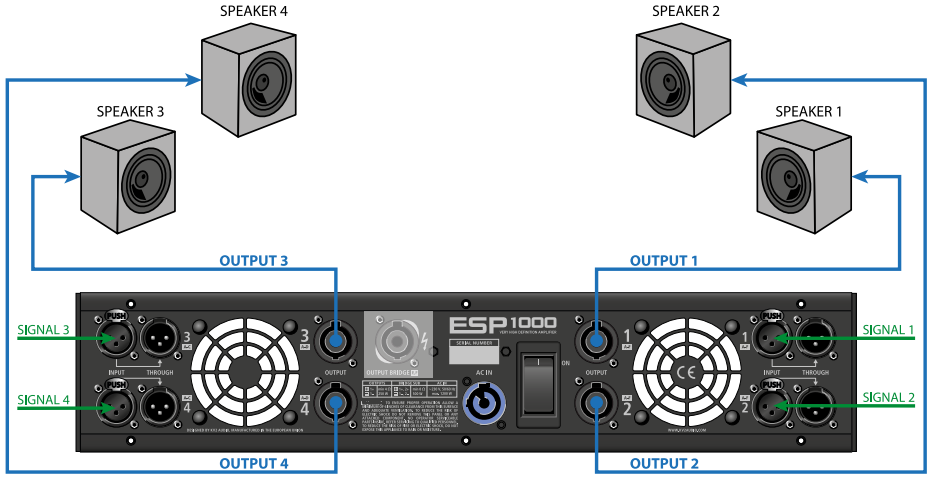

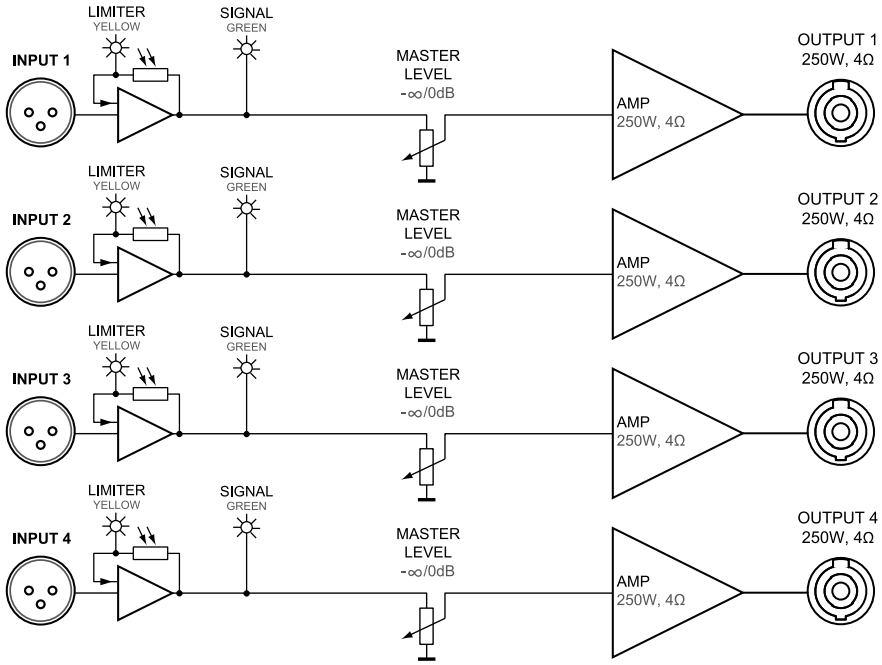

Position B / ESD Cube Preset

4 Channels, 8x ESD Cube

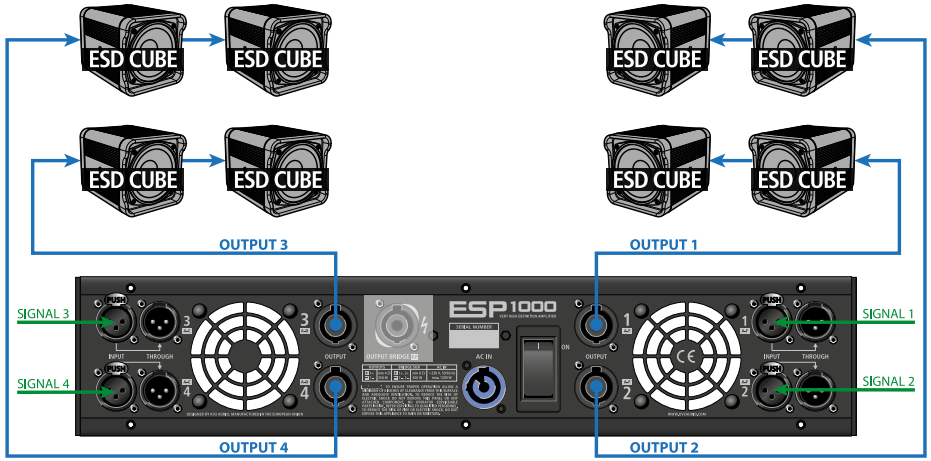

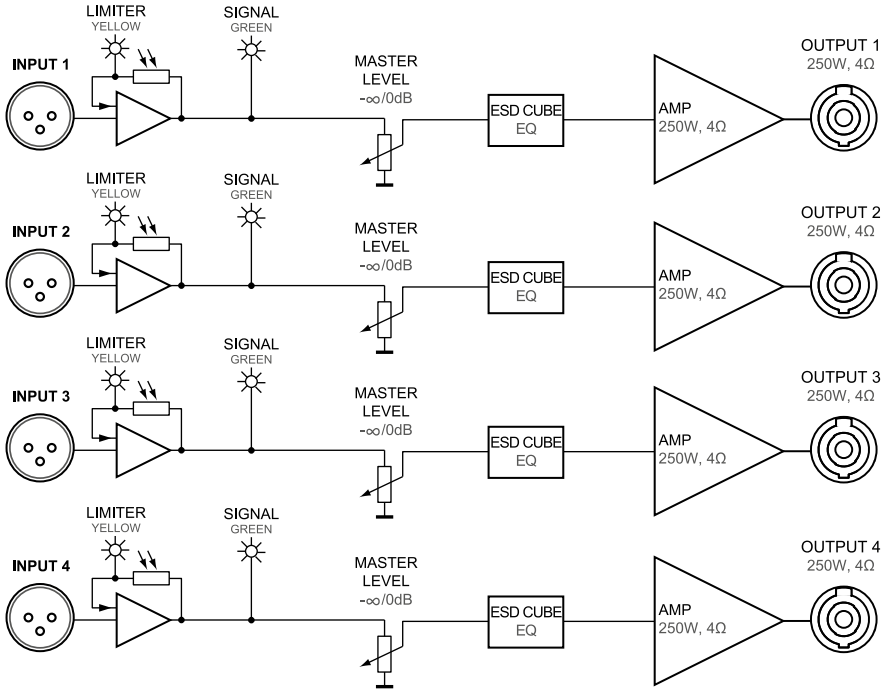

Position C / ESD Cube Preset + Low End Boost

4 Channels, 8x ESD Cube

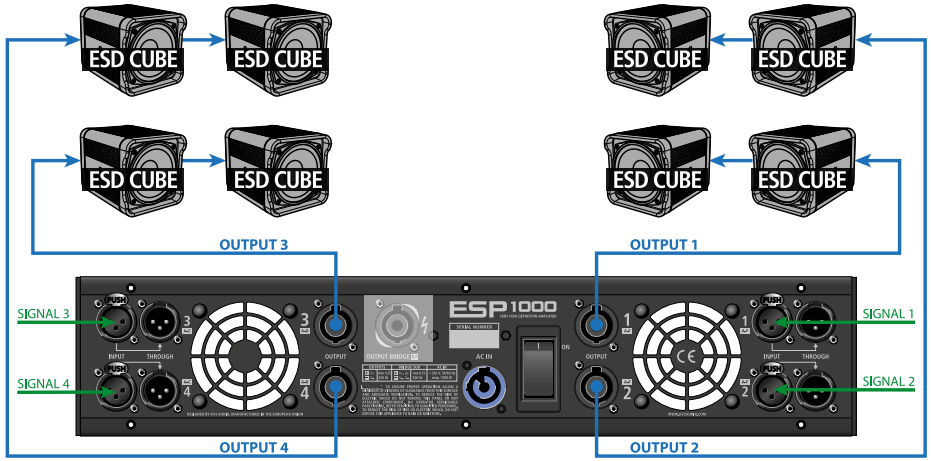

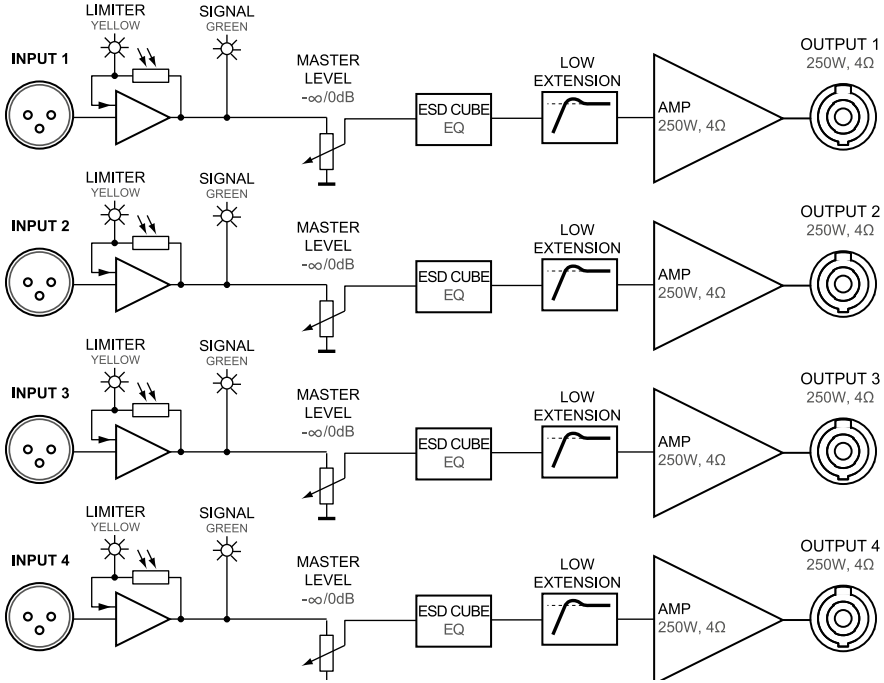

Position D / ESD Cube 2-Way System + Sub

2 Channels, 4x ESD Cube / 2x Subwoofer max. 250W

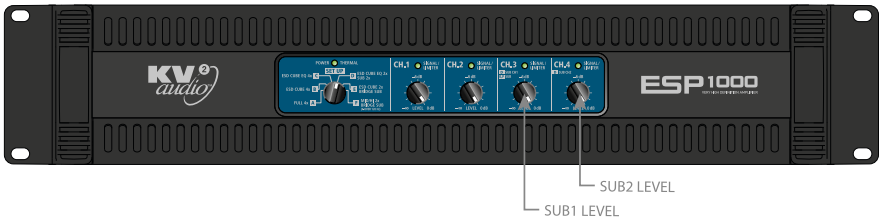

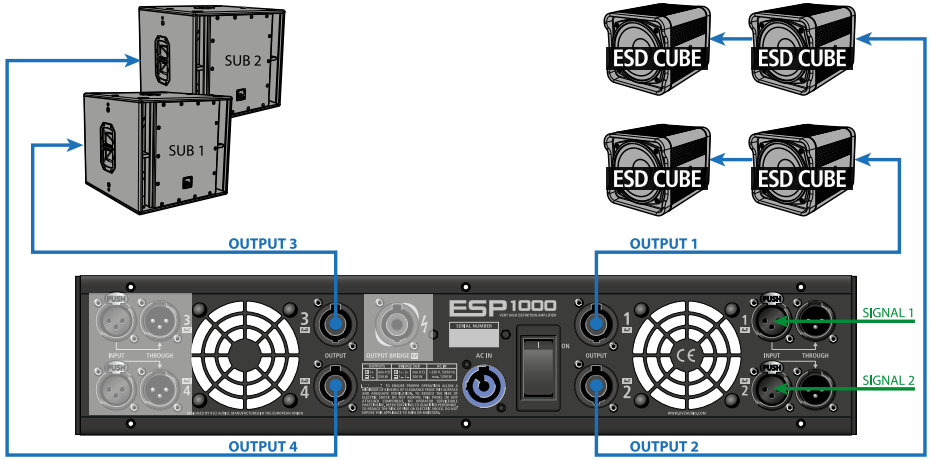

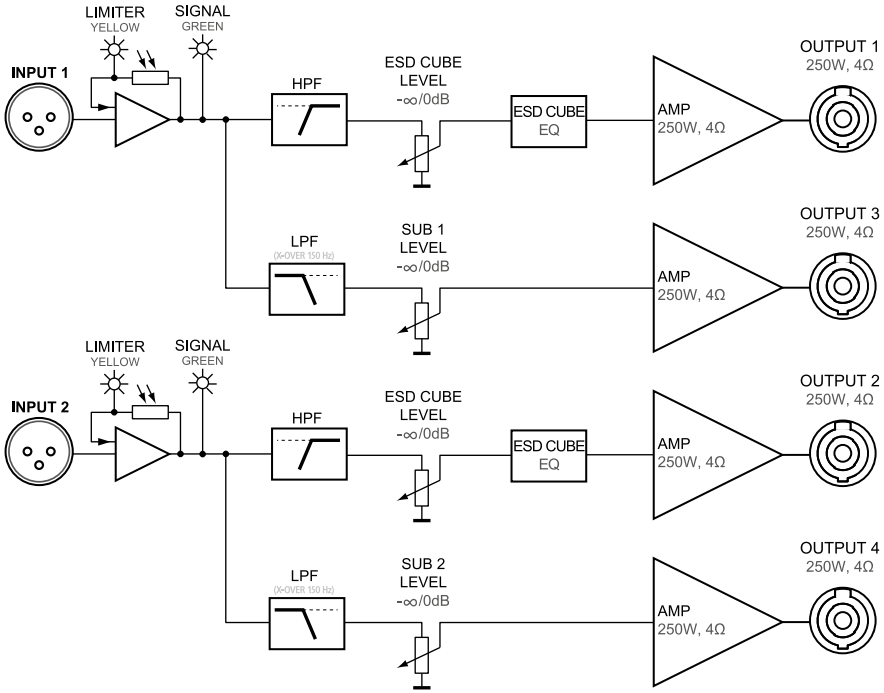

Position E / ESD Cube 2-Way System + Bridged Sub

2x ESD Cube Subwoofer (Output Power 500W)

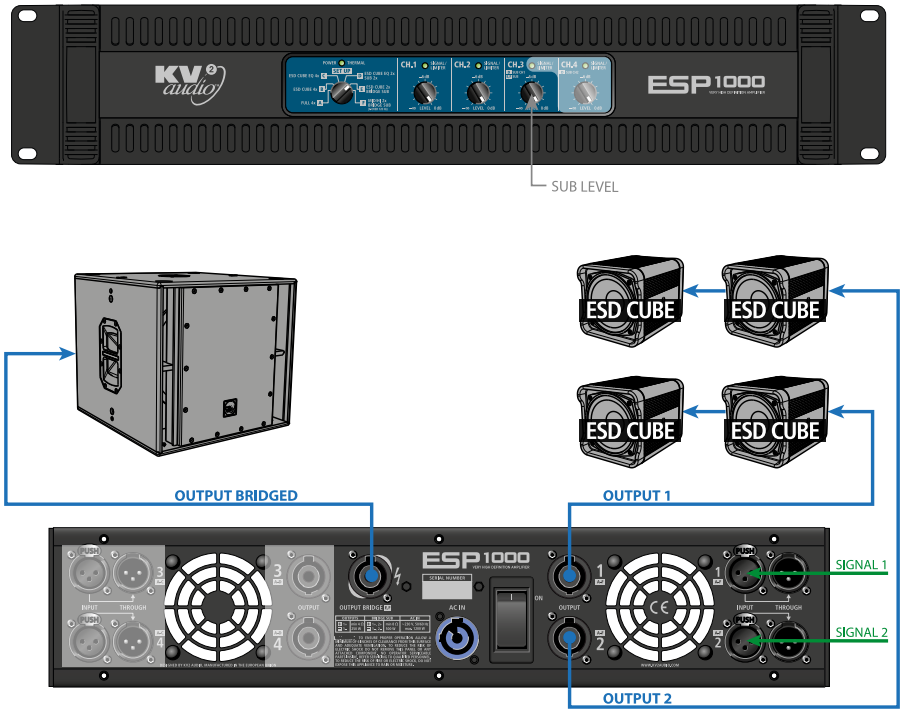

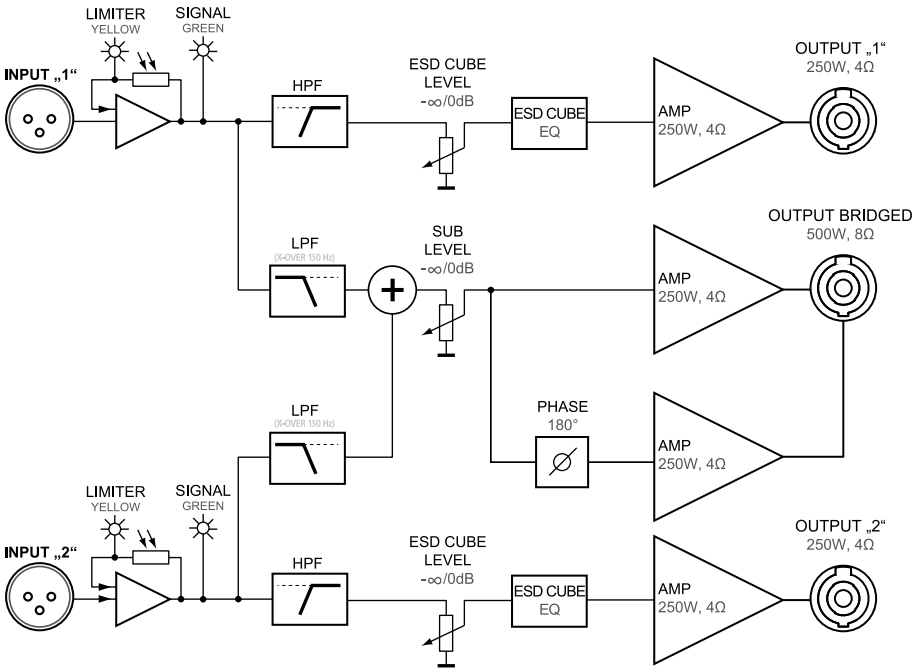

Position F / Any Full Range Speaker + Bridged Sub
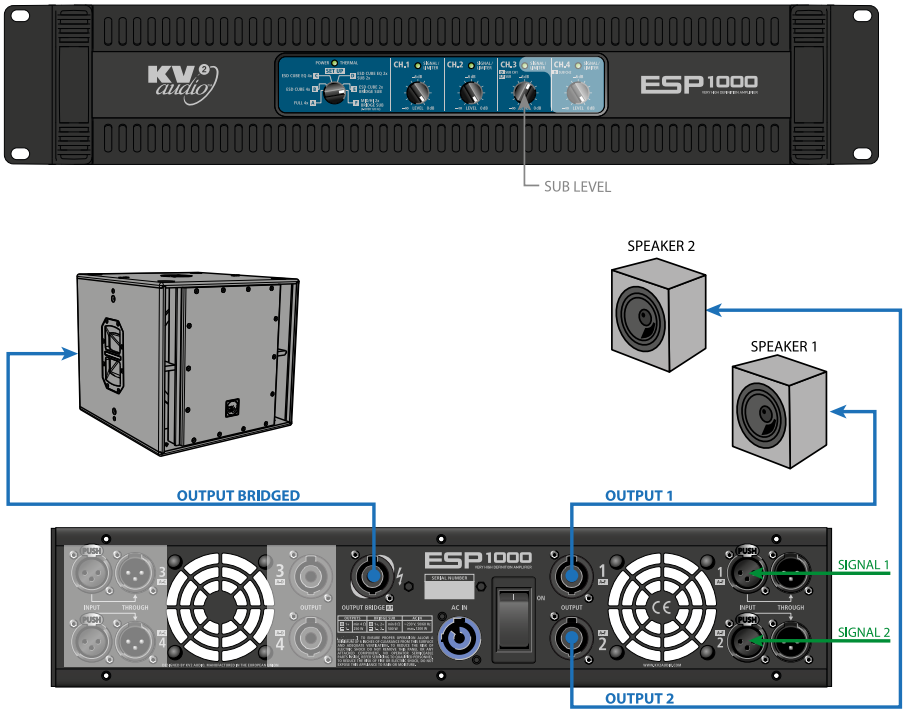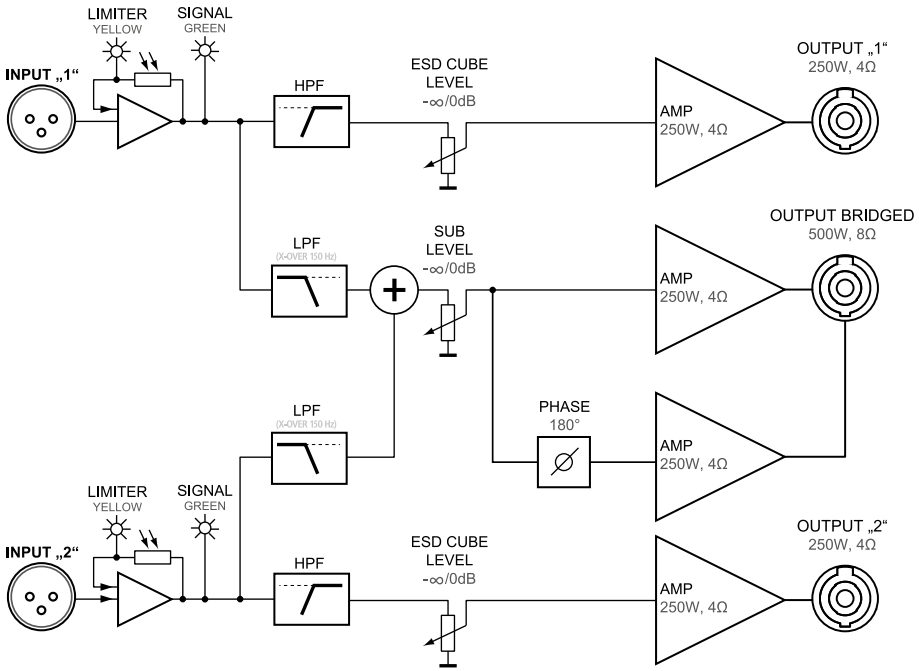
2x Mid/Hi Speakers / Subwoofer (Output Power 500W)